DOORS: 1:50

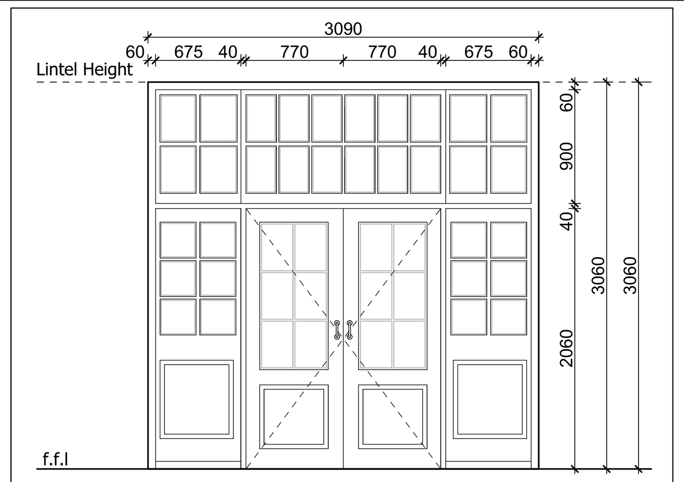

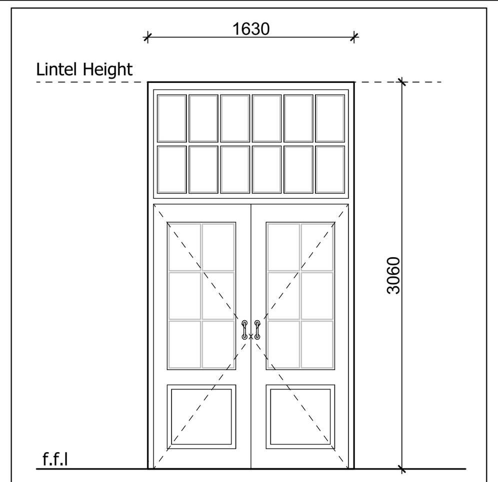

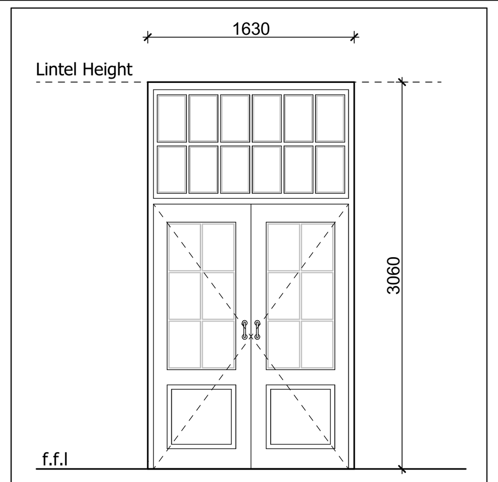

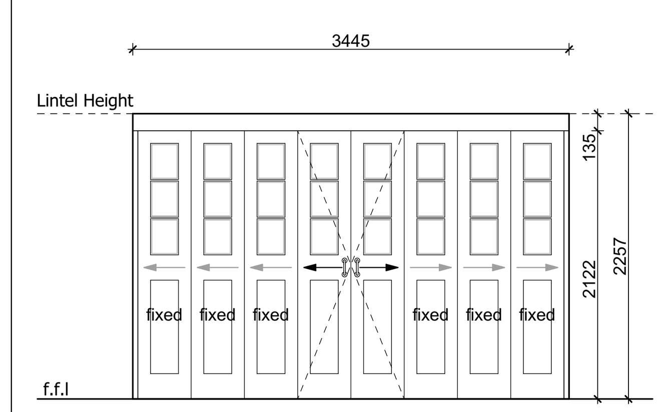

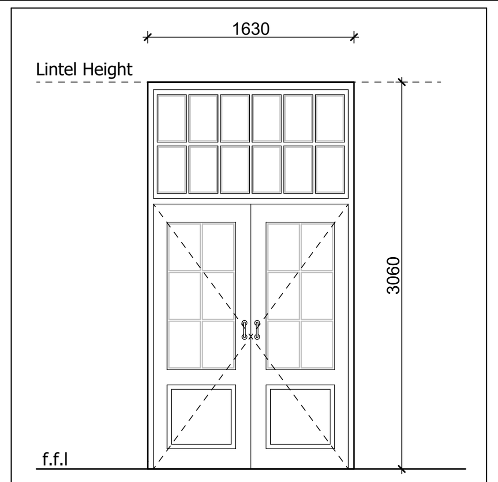

NUMBER	**D1-001** (Existing)	**D1-4** (Existing)	**D1-5** (Existing)	**D1-6** (Existing)	**D1-7** (Existing)
QTY & POSITION	(1x) Double door with fan & sidelight @ Central Circulation Spine	(1x) Double door with fanlight @ Central Circulation Spine	(1x) Double door with fanlight @ Central Circulation Spine	(1x) Sliding folding stack door @ Central Circulation Spine	(1x) Double door with fanlight @ Central Circulation Spine
DESCRIPTION	Timber door with fan & sidelights. Paint worn off timber door frame, leafs with glazing panels, fanlight and sidelights - Rub down timber surfaces with suitable abrasive paper and treat all knots. Stop nails, screws and cracks with hard stopping. Prime with wood primer; add on universal undercoat; finish with one coat egg-shell alkyd paint; all to manufacturer's specifications (sample panel to be approved). Colour to match existing. Repair and do maintenance on all doors with similar ironmongery.	Double timber door with fanlight. Paint worn off timber door frame, leafs with glazing panels, and fanlight - Rub down timber surfaces with suitable abrasive paper and treat all knots. Stop nails, screws and cracks with hard stopping. Prime with wood primer; add on universal undercoat; finish with one coat egg-shell alkyd paint; all to manufacturer's specifications (sample panel to be approved). Colour to match existing. Repair and do maintenance on all doors with similar ironmongery.	Double timber door with fanlight. Paint worn off timber door frame, leafs with glazing panels, and fanlight - Rub down timber surfaces with suitable abrasive paper and treat all knots. Stop nails, screws and cracks with hard stopping. Prime with wood primer; add on universal undercoat; finish with one coat egg-shell alkyd paint; all to manufacturer's specifications (sample panel to be approved). Colour to match existing. Repair and do maintenance on all doors with similar ironmongery.	Sliding Folding Stack Door. Finish worn off timber door frame and folding leafs with glazing panels - Replace damaged timber pieces & properly piece in timber pieces - to match existing. Rub down timber surfaces with suitable abrasive paper and treat all knots. Stop nails, screws and cracks with hard stopping. Prime with wood primer; add on universal undercoat; finish with final rendering as agreed with client (sample panel to be approved). Colour to match existing. Repair and do maintenance on all doors with similar ironmongery.	Double timber door with fanlight. Paint worn off timber door frame, leafs with glazing panels, and fanlight - Rub down timber surfaces with suitable abrasive paper and treat all knots. Stop nails, screws and cracks with hard stopping. Prime with wood primer; add on universal undercoat; finish with one coat egg-shell alkyd paint; all to manufacturer's specifications (sample panel to be approved). Colour to match existing. Repair and do maintenance on all doors with similar ironmongery.
ACCESSORIES	Door handles & locksets as per existing.	Existing door handles & locksets as per existing.	Existing door handles & locksets as per existing.	Existing door handles & locksets as per existing.	Existing door handles & locksets as per existing.
FINISHING	White.	White.	White.	White.	White.
GLASS	To SANS 10400 part N & AAMSA Existing or New: 4mm Clear glass.	To SANS 10400 part N & AAMSA Existing or New: 4mm Clear glass.	To SANS 10400 part N & AAMSA Existing or New: 4mm Clear glass.	To SANS 10400 part N & AAMSA Existing or New: 4mm Clear glass.	To SANS 10400 part N & AAMSA Existing or New: 4mm Clear glass.

DOORS: 1:50

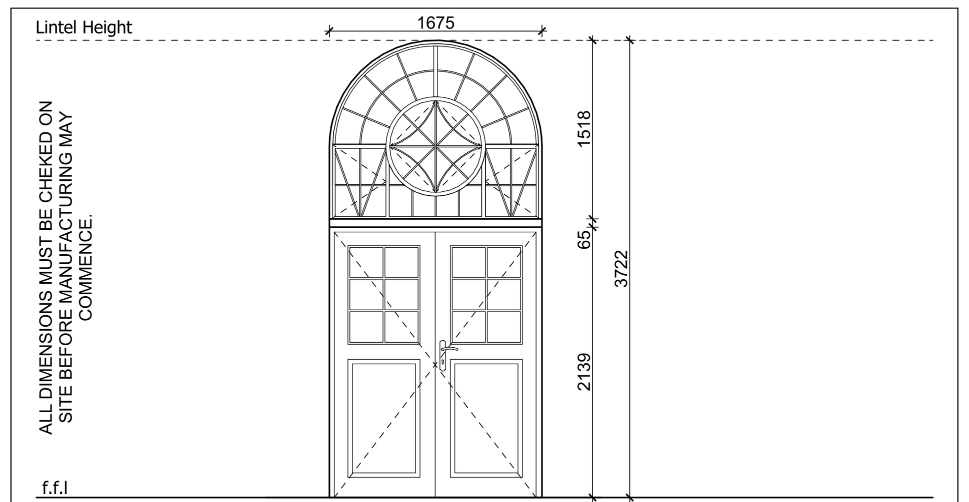

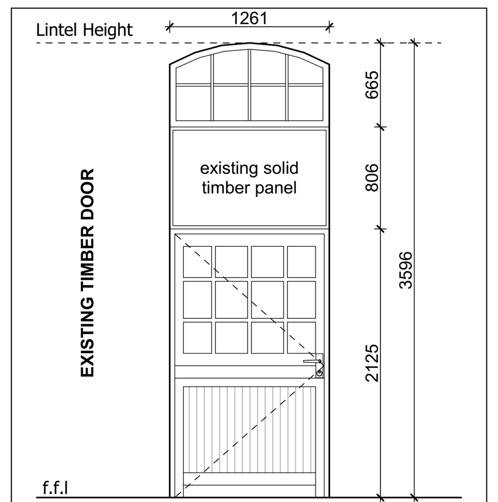

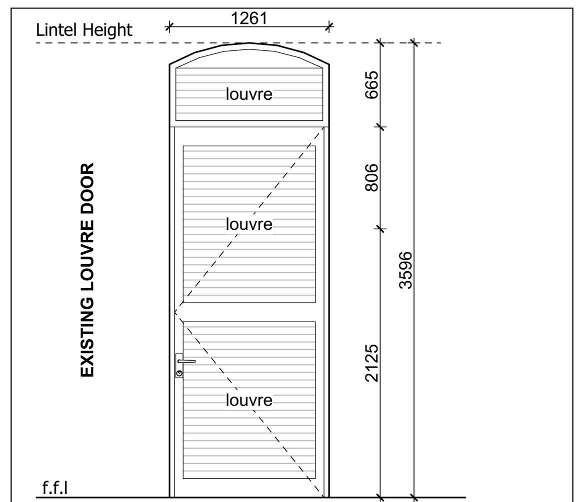

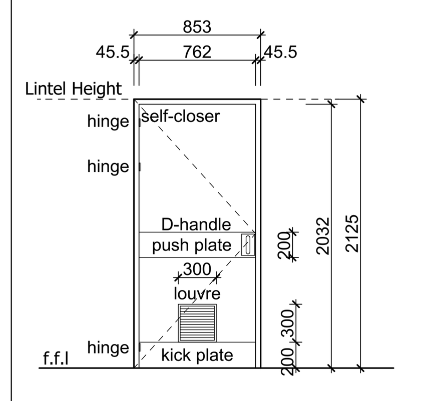

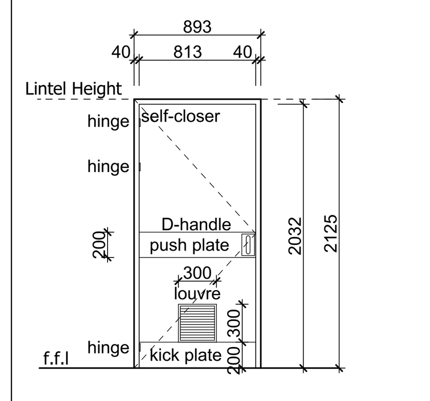

ALL DIMENSIONS MUST BE CHECKED ON SITE BEFORE WORK & MANUFACTURING MAY COMMENCE

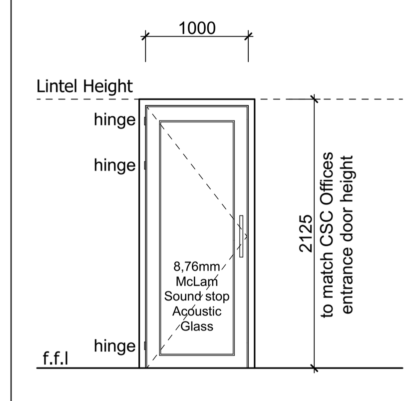

NUMBER	**D1-7** (Existing)		**1-2** (Existing)	**1-2.1** (Existing to rework)	**D4-001, D5-001** (New Internal)	**D6-001** (New Internal)	**D07-001** (New Internal)
QTY & POSITION	(1x) Double door with fanlight @ Central Circulation Spine		(1x) Single door with fanlight @ Central Circulation Spine	(1x) Single door with fanlight @ Central Circulation Spine	(x2) New Toilet doors	(x1) New Lobby entrance door	(x1) Internal Door between CSC Offices & CSC Worktations
DESCRIPTION	Double timber door with fanlight. Paint worn off timber door frame, leafs with glazing panels and paint peeling from m/s fanlight that has clear glass with lead saddle bars and cracked putty - Timber door - Rub down timber surfaces with suitable abrasive paper and treat all knots. Stop nails, screws and cracks with hard stopping. Prime with wood primer; add on universal undercoat; finish with one coat egg-shell alkyd paint; all to manufacturer's specifications (sample panel to be approved). Colour to match existing. Ironmongery - Repair and do maintenance on all doors with similar ironmongery. Door swing to be changed to allow for the fire escape to open to the outside of the building. Rework frame rebate for door to open outwards	Mild steel fanlight - Inspect all mild steel fanlights; sand down; treat with rust agent; apply base coat and two final paint coats all to manufacturer's specifications (sample panel to be approved). Colour to match existing. Inspect all glazing panels and remove putty where missing and brittle. Confirm that glazing comply with SANS 10400 part N & SANS XA EDITION 2. Clean with dry brush; re-insert putty to secure glazing panels; allow drying and re-paint to manufacturer's specifications. Colour to match existing. Sample panel to be approved. Clear glass with lead saddle bars - Restoration & repair by accredited stained-glass restorer as provided.	Restore & repair single timber door with fanlight. Damage to timber door leaf and finish worn off timber door leaf and frame - Inspect all timber doors; replace rotten and damaged timber pieces & properly piece in timber pieces - to match existing. Inspect and repair. Rub down timber surfaces with suitable abrasive paper and treat all knots. Stop nails, screws and cracks with hard stopping. Prime with wood primer; add on universal undercoat; finish with final rendering as agreed with client (sample panel to be approved). Colour to match existing. Door to be permanently fixed in place. Rework door as per schedule.	Existing single timber door with fanlight (existing alum. louvre inserts). Damage to timber door leaf and finish worn off timber door leaf and frame - Inspect all timber doors; replace rotten and damaged timber pieces & properly piece in timber pieces - to match existing. Inspect and repair. Rub down timber surfaces with suitable abrasive paper and treat all knots. Stop nails, screws and cracks with hard stopping. Prime with wood primer; add on universal undercoat; finish with final rendering as agreed with client (sample panel to be approved). Colour to match existing. Door for access to HVAC room.	762mm wide semi solid internal bathroom door (RH opening). Disbable bathroom access door. Timber door frame to match 762mm wide door.	813mm wide semi solid internal bathroom door (RH opening). Disbable bathroom access door. Timber door frame to match 813mm wide door.	Purpose made aluminium hinged door by manufacturer with sound stop glass.
ACCESSORIES	Existing door handles & locksets as per existing.		Existing door handles & locksets as per existing.	Existing door handles & locksets as per existing.	All accessories by QSProducts. Door handles, hinges, locksets & kick plates to be approved by architect.	All accessories by QSProducts. Door handles, hinges, locksets & kick plates to be approved by architect.	All accessories by manufacturer. Door handles & locksets to be approved.
FINISHING	White.		White.	White.	White.	White.	To be approved by client.
GLASS	To SANS 10400 part N & AAMSA Existing or New: 4mm Clear glass.		To SANS 10400 part N & AAMSA Existing or New: 4mm Clear glass.	N/A	N/A	N/A	To SANS 10400 part N & AAMSA. 8,76mm McLam Sound stop Acoustic Glass, with sand blasted decals where indicated.

DOORS: 1:50

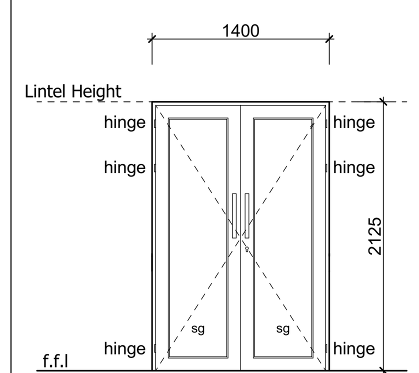

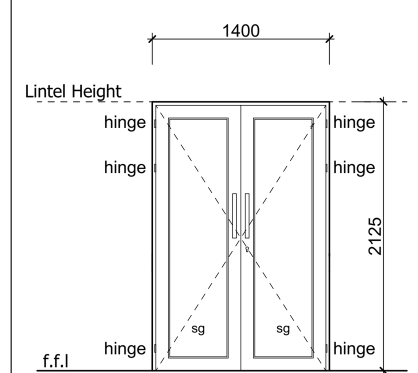

NUMBER	**D1-5.1** (Existing Internal)	**D1-5.2** (Existing Internal)
QTY & POSITION	(x1) Internal Door Digital Capability Lab	(x1) Internal Door - Career Services Offices
DESCRIPTION	Purpose made aluminium hinged double door by aluminium manufacturer.	Purpose made aluminium hinged double door by aluminium manufacturer.
ACCESSORIES	All accessories by manufacturer. Door handles & locksets to be approved.	All accessories by manufacturer. Door handles & locksets to be approved.
FINISHING	Natural Anodized Aluminium	Natural Anodized Aluminium
GLASS	To SANS 10400 part N & AAMSA New: 6mm Clear Safety glass.	To SANS 10400 part N & AAMSA New: 6mm Clear Safety glass.

FENESTRATION

Buildings with Natural Environmental Control: SANS 10400XA

Glazing Information | Shading as per Clause 5,2 | Specification as per Clause 5,3 | Solution

Dwelling		Glazing Elements		Glazing Element Size								REQUIRED		REQUIRED	Table E.1 Glazing Element		ACHIEVED	
Orientation	Storey Level	Gazing Ref	Quantity	Width (m)	Height (m)	Area	(H) Height (m)	Lat. Multiplier(M)	(G) Height (m)	Required (P)	Measured (P)	(P) Comply	U-value	SHGC	Sum SHGC	U-value	SHGC	Conductance	SHGC
North	Ground Storey	W1	5	1.230	2.590	15.929	3.38	0.400	0.790	1.352	1.080	NO	Any Solution	Any Solution	AnySolution	5.60	0.33	COMPLY	COMPLY
East	Ground Storey	W1	3	1.230	2.590	9.557	3.38	0.400	0.790	1.352	1.080	NO	Any Solution	Any Solution	AnySolution	5.60	0.25	COMPLY	COMPLY
East	Ground Storey	W2	8	1.680	2.080	27.955	2.86	0.400	0.780	1.144	1.050	NO	Any Solution	Any Solution	AnySolution	5.60	0.33	COMPLY	COMPLY
West	Ground Storey	W2	7	1.680	2.080	24.461	2.86	0.400	0.780	1.144	1.050	NO	Any Solution	Any Solution	AnySolution	5.60	0.33	COMPLY	COMPLY
South	Ground Storey	W1	2	1.230	2.590	6.371	3.38	N/A	0.790	N/A	1.080	N/A	Any Solution	Any Solution	Any Solution	4.30	0.25	COMPLY	COMPLY
West	Ground Storey	W1	4	1.230	2.590	12.743	3.38	0.400	0.790	1.352	1.080	NO	Any Solution	Any Solution	Any Solution	4.30	0.25	COMPLY	COMPLY
North	Ground Storey	D1-2 & D1-2.1	2	1.260	3.590	9.047	4.38	0.400	0.790	1.752	0.950	NO	Any Solution	Any Solution	Any Solution	4.30	0.25	COMPLY	COMPLY
East	Ground Storey	D1-002	1	3.090	3.060	9.455	4.38	0.400	1.320	1.752	1.430	NO	Any Solution	Any Solution	Any Solution	4.30	0.25	COMPLY	COMPLY
West	Ground Storey	D1-001	1	3.090	3.060	9.455	4.38	0.400	1.320	1.752	1.430	NO	Any Solution	Any Solution	Any Solution	4.30	0.25	COMPLY	COMPLY
West	Ground Storey	D2-001	1	1.680	3.720	6.250	4.38	0.400	0.660	1.752	1.030	NO	Any Solution	Any Solution	Any Solution	4.30	0.25	COMPLY	COMPLY

SANS 10400XA COMPLIANCE

	Nett Floor Area of Storey / Room (m^2)	Fenestration Area of Storey / Room (m^2)	% Fenestration Area to Nett Floor Area	
Ground Storey	658.220	131.223	19.936	In accordance with requirements of Clause 5
First Storey	0.000	0.000	#DIV/0!	#DIV/0!
Second Storey	0.000	0.000	#DIV/0!	#DIV/0!
Third Storey	0.000	0.000	#DIV/0!	#DIV/0!

Average SHGC Northern Orientation

	Northern Fenestration Area (m^2)	Total SHGC	Ave. SHGC
Ground Storey	124.85	0.00	0.00
First Storey	0.00	0.00	#DIV/0!
Second Storey	0.00	0.00	#DIV/0!
Third Storey	0.00	0.00	#DIV/0!

FENESTRATION CALCULATIONS not to scale

ISSUE FOR TENDER - JANUARY 2025

general:

SANS 2001

Applicable standards:
- the contractor (including sub-contractors) shall be familiar with the contents of SANS 10400 and related SANS 2001 standards.
- provide on site: one hard/digital copy of SANS 10400 and related SANS 2001 parts when requested
- copies are available from www.sabs.co.za Standard-Sales/
- the specification data as described below make this specification project specific and shall have precedence in the interpretation of any ambiguity or inconsistency between this specification and these standards
- accuracy in building work: SANS 10155: gra except where stated otherwise

site clearance:
SANS 2001-BS1 Site clearance:
- materials from grubbing and demolition of structures to be disposed of to a designated site
- trees, turf, plants, bushes, shrubs, flora to be retained or replanted to instruction by landscape architect

earthworks:
SANS 2001-BE Earthworks (General):
- topsoil to be conserved and reused after completion of construction work
- surplus and unsuitable material to be dumped at location as agreed with contractor

concrete works:
structural works: SANS 2001-CC1 Construction works to eng specifications
minor works: SANS 2001-CC2 Concrete works (minor works)
- horizontal surfaces that need to be non-skid: all pedestrian walkways, ramps

foundations:
SANS 2001-CM2 Strip footings, pad footings and slab-on-the-ground foundations for masonry walling: includes the construction of lightly loaded concrete surface beds
- site class designation: according to eng
- foundations: to eng specifications and/or in accordance with the requirements of SANS 10400-H for strip footings, slab-on-the-ground foundations or modified normal construction for category of expected damage 1
- protection against termites: SANS 10124: within new building perimeter and under new paving when required
- apply weed killer under new paving

Concrete floors and paving on the ground:
- concrete floors: power-floated to smooth finish ready to receive floor finish - no screeds allowed
- concrete paving on the ground: grade 20 concrete, delay wood-troweled finish to compact non-slip surface.

masonry construction:
SANS 2001-CM1 Masonry walling:
- type of masonry unit: burnt clay: SANS 227
- class and colour of face units: FBS / FBX to arch approval
- class of common units: NFP for plastered walls, NFX for masonry exposed to damp or in contact with the ground
- work size: 222 x 103 x 76 mm
- nature of FBS / FBX units: hollow

SANS 2001-CT2 Structural timberwork (roofing):
- monoplanar prefabricated rational design SANS 1900/SANS10243 prepared by a Competent Person and inspected and certified by such a person during erection.

steelwork:
Structural steelwork: to eng specifications
Sundry steelwork:
- commercial quality steel allowed if yield stress equals 200Mpa
- structural steel tubes: SANS 657 part 1
- welding: all visible welds to be continuous, ground smooth; remove dross, burrs, irregularities

insulation, sealants:
- to conform to SANS 204 energy requirements
- reflective foil under roof tiles: SANS 1381-4, class B, one surface reflective, facing down; leave >25mm air space between foil and solid surface
- flexible fibre mats: SANS 1381-1, manufactured from recycled materials, e.g. polyethylene terephthalate (PET).
- pipe insulation: bonded preformed mineral fibre pipe sections SANS 1445-3, marked with expected maximum service temperature and exposure conditions.
- joint fillers: compatible with surfaces to be sealed; life expectancy >30yrs; apply to manufacturer's instructions

roof coverings:
SANS 10062 fixing of interlocking roof tiles
- roof fasteners: SANS 1273.
- tile roofing: Marley Double Roman Plus (colour to architect)
- profiled roof sheeting: IBR with chromadek finish (colour to architect) in long lengths
- fixing: strictly to manufacturer's instructions
- flashings and counter-flashings: steel sheet of same material and colour as roofing sheet, >75mm high against side-walls and >200mm wide over at least two ribs of roof sheet, and purpose-made head-wall flashings including serrated closers and poly-closers; tapered flashings to pipes.

roofs: SANS 10400 R fgutters & downpipes.

waterproofing:
- reinforced liquid membranes: acrylic emeulsion paint reinforced with non-woven needle-punched polyester or popypropylene fibre fabric, to tops of parapet walls.
- no reinforced liquid membranes are allowed to waterproof sheet or tile roof edges.

ceilings:
- gypsum plasterboard: SANS 266, with H-profile cover strips: Nail boards to timber brandering with 38 mm hot dip galvanized clout nails or 32 x 2,5 mm diameter hot dip galvanized serrated ceiling nails, at 150 mm centres.
- 75 mm wide coved gypsum cornice: SANS 662, nailed to brandering and glued to wall. Mitre corners, splay heading joints.
- Install 650 x 650 mm clear opening steel hatch as per ceiling plan.

windows & doors:
Steel windows SANS 727 Windows and doors made from hot rolled mild steel sections, factory primed. Painted as per finishing schedule.
SANS 1129 pressed steel door frames:
- type 1A - single leaf, no fanlight
- hinges: steel, welded on
- size: 813 x 2032 mm or as specified
- profile: as specified
- lock type: mortice
- finish: factory primed.

Timber doors: SANS 545 Wooden doors:
- type: internal: flush; external: batten door
- performance class: heavy duty
- size: 813 x 2032 x 40 mm
- finish flush door: fibre board

cement plaster:
SANS 2001-EM1 Cement plaster:
- internal finish: 1 coat cement plaster, steel troweled
- external finish: 1 coat cement plaster, wood troweled

ceramic floor and wall tiling:
- ceramic tiles: SANS 1449 group B2; porcelain tiles SANS 13006 group B1a of size, shape, pattern and colour to arch approval
- installation: SANS 10107 The design and installation of ceramic tiling.
- fix tiles to power floated concrete surface with tile adhesive as recommended by the tile manufacturer.
- joints: 6mmwide, straight, continuous and flush pointed with coloured cement grout (colour to architect). Prepare sample panel for approval by arch.
- movement joints - start floor tiles 10mm away from all walls.
- ensure structural joint width is the same as structural joint widths in substrate and aligned

floor coverings: see schedules install stricktly to manufacturer's specifications.

painting:
SANS 10305 Painting of Buildings part 4, 5, 6.
Materials:
- suitable for intended purpose and for surface to which it is applied;
- exterior quality for external work; grade 2 (high hiding, washable) for interior work

Preparation:
- remove hardware, light fittings and other removable fittings that can be contaminated; mark, store and refix after completion; mask fittings that cannot be removed
- clean all surfaces of loose paint, rust, dirt, grease, soot, mould and marks - spare no time or effort; avoid scratching glass in wood-framed windows
- When using blow-torch methods, ensure fire extinguishers are readily available
- Remove mold and algae by brushing and application of a fungicidal wash; allow to dry

Application:
- Follow manufacturer's instructions strictly structural roof timberwork:

hardware, signs: see schedules
- fix hardware with matching screws
- protect hardware during construction
- hand over keys labelled with coloured plastic tags

glazing:
SANS 10400 N 4.1.1. Safety glass shall be permanently marked.
SANS 2001-CG1 Installation of glazing

drainage & water supply:
SANS 10400-P Drainage
SANS 2001-DP1 Earthworks for buried pipelines
SANS 2001-DP2 Below ground medium pressure pipelines
- pipes: polyethylene SANS 4427, size as specified

SANS 2001-DP4 Sewers
SANS 2001-DP6 below ground water installations for buildings
SANS 2001-DP7 Sewers for buildings
- pipes: unplasticised polyvinyl chloride (PVC-U) SANS 791, size and gradient as specified.

SANS 1808: Water supply and distribution system components
SANS 10252 Water supply and drainage for buildings.
- Installation: surface piping, whether visible or not, e.g. in ducts, shall be neatly done in horizontal and vertical lines, where visible >20mm away from finished surfaces

solar installation:
Type: To comply with 10400-XA and with SANS 10106.
- all exposed hot water service pipes shall be clad with insulation with a minimum R-value in accordance with SANS XA.

environmental sustainability & energy usage in buildings:
Type: To comply with 10400-X:2021 and 10400-XA:2021.

general:

revisions:

FIRE NOTE: SANS 10400-T

4.9.2 In any building classified as H3 or H4.

a) Any separating element (wall and floor) between any garage that is not large enough to be classified as J4 and any habitable room shall have a fire resistance of not less than 30 min and the wall shall extend to the underside of the roof;
b) Any door between such garage and any such room shall have a fire resistance of not less than 30 min and such doorway shall require a threshold of not less than 10 mm; and.
c) No combustible roof components shall penetrate the separating element dividing the space between the garage and the habitable room.

GLASS NOTES:

3mm Thick glass to areas not exceeding 0.75sqm,
4mm Thick to areas not exceeding 1.5sqm & 6mm thick glass to all areas bigger than 1.5sqm.
Safety glass to all doors and windows lower than 500mm from unfinished floor level.
All glass must comply to SANS 10400 N & SANS XA fenestration.
(see window & door schedule for glass specifications)

WOOD NOTES:

All wood to comply with SANS 10163.

client's signature

engineer's signature

architect's signature

UNIVERSITEIT VAN PRETORIA
UNIVERSITY OF PRETORIA
YUNIBESITHI YA PRETORIA

project description:
HPH074 UNIVERSITY OF PRETORIA:
RESTORATION & INTERNAL REFURBISHMENT OF
OLD CHEMISTRY BUILDING (4051)

drawing description:
TENDER:
Door Schedule - Timber & Mild Steel

scale: 1: 100 date: 29 January 2025

hpa • architects & • heritage architects

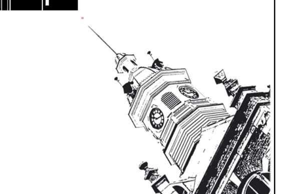

84 portebello drive
centurion golf estate
po box 66478
highveld park 0169
south africa
cell:(+27) 083-2716778
email: hpa@mwebbiz.co.za

H.S. POTGIETER: B.Arch (Pret) Arch (SA) MIA 4951 GradDipCons (AA) London BA FA (Pret) S.A.C.A.P: 4951

Copyright of this drawing is vested in 'HP Architects'. Only with prior written permission of the author may this drawing be reproduced. All dimensions to be confirmed on site prior to construction. Refer discrepancies back to the architect. Drawings not to be scaled - refer to dimensions.

DWG	REV
702	00
DRAWN	DESIGN
CB	HP