JUNIOR TUKKIE

Physical Sciences

Gr.11 Junior Tukkie Summer School 2019

Facilitator: Dr. S. Swanepoel

PERIODIC TABLE/PERIODIEKE TABEL

Key/Sleutel

Atomic number (Z) / Atoomgetal (Z)	1
Atomic radius (pm) / Atoomradius (pm)	37
Symbol	H
Electro-negativity / Elektronegatiwiteit	2,1
1st ionisation energy (kJ.mol^{-1}) / 1ste ionisasie-energie (kJ.mol^{-1})	1310
Relative atomic mass / Relatiewe atoommassa	1

	I	II	III	IV	V	VI	VII	0
1	1 H 2,1 37 1310 1							2 He 93 2360 4
2	3 Li 1,0 152 520 7	4 Be 1,5 111 900 9	5 B 2,0 79 790 10,8	6 C 2,5 77 1090 12	7 N 3,0 74 1400 14	8 O 3,5 74 1310 16	9 F 4,0 71 1680 19	10 Ne 112 2080 20
3	11 Na 0,9 186 490 23	12 Mg 1,2 160 730 24,3	13 Al 1,5 143 580 27	14 Si 1,8 118 780 28	15 P 2,1 110 105 31	16 S 2,5 102 1000 32	17 Cl 3,0 100 1250 35,5	18 Ar 154 1520 40
4	19 K 0,8 227 415 39	20 Ca 1,0 197 590 40	21 Sc 1,3 161 635 45	22 Ti 1,5 145 655 48	23 V 1,6 131 645 51	24 Cr 1,6 125 655 52	25 Mn 1,5 137 710 55	26 Fe 1,8 124 760 56
	27 Co 1,8 125 760 59	28 Ni 1,8 125 730 59	29 Cu 1,9 128 740 63,5	30 Zn 1,6 133 910 65,4	31 Ga 1,6 122 580 70	32 Ge 1,8 123 780 72,6	33 As 2,0 124 965 75	34 Se 2,4 116 945 79
	35 Br 2,8 114 1140 80	36 Kr 169 1350 84						
5	37 Rb 0,8 248 410 85,5	38 Sr 1,0 215 550 88	39 Y 1,2 178 635 69	40 Zr 1,4 159 675 91	41 Nb 1,6 143 655 93	42 Mo 1,8 136 960 96	43 Tc 1,9 133 99	44 Ru 2,2 133 720 101
	45 Rh 2,2 135 740 103	46 Pd 2,2 138 800 106	47 Ag 1,9 144 730 108	48 Cd 1,7 149 865 112	49 In 1,7 163 560 115	50 Sn 1,8 141 705 119	51 Sb 1,9 145 830 112	52 Te 2,1 143 865 128
	53 I 2,5 133 1000 127	54 Xe 190 1160 131						
6	55 Cs 0,7 265 375 133	56 Ba 137,4	72 Hf	73 Ta	74 W	75 Re	76 Os	77 Ir
	78 Pt	79 Au	80 Hg	81 Tl	82 Pb 207	83 Bi	84 Po	85 At
	86 Rn							
	87 Fr	88 Ra						

57 La	58 Ce	59 Pr	60 Nd	61 Pm	62 Sm	63 Eu	64 Gd	65 Tb	66 Dy	67 Ho	68 Ei	69 Tm	70 Yb	71 Lu
89 Ac	90 Th	91 Pa	92 U	93 Np	94 Pu	95 Am	96 Cm	97 Bk	98 Cf	99 Es	100 Fm	101 Md	102 No	103 Lw

ELECTRO-NEGATIVITY DIFFERENCE / ELEKTRONEGATIWITEITSVERSKIL	0,1	0,2	0,3	0,4	0,5	0,6	0,7	0,8	0,9	1,0	1,1	1,2	1,3	1,4	1,5	1,6	1,7	1,8	1,9	2,0	2,1	2,2	2,3	2,4	2,5	2,6	2,7	2,8	2,9	3,0	3,1	3,2
% IONIC / % IONIES	0,5	1,0	2,0	4,0	6,0	9,0	12	15	19	22	26	30	34	39	43	47	51	55	59	63	67	70	74	76	79	82	84	86	88	89	91	92

Physical Sciences

Contents

1 Forces and Newton's Laws

Resultant and components

Force diagrams: The forces on the object are drawn **where they act**.

- Weight (F_g) is drawn from the centre of mass.
- Contact forces: Frictional force and normal force is on/from the surface.

Free body-diagram: Forces are drawn emanating **from** the object **(dot)**.

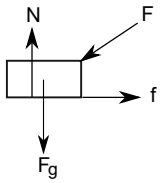

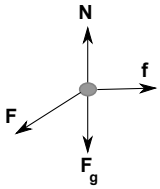

(Draw only F_g **OR** both components $F_{g\perp}$ and $F_g||$.)

Resultant or net force is the single force whose effect is the same as the individual forces acting together.

Head-to-tail	**Tail-to-tail**
The resultantn starts where the first vector starts and ends where the last vector ends. 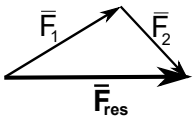	Complete the parallelogram. The resultant is the diagonal of the parallelogram. 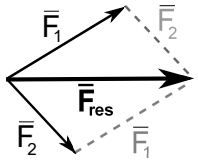

Components are two perpendicular vectors, that gives the original vector when they are combined.

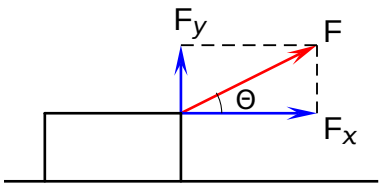 $F_x = F\cos\Theta$ $F_y = F\sin\Theta$ Θ relative to horisontal	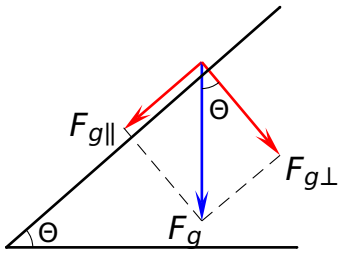 $F_{g\perp} = F_g\cos\Theta$ $F_{g\|} = F_g\sin\Theta$ Θ relative to horisontal

QUESTION 1

1.1

Indicate which method of vector addition is used and draw the resultant vector.		
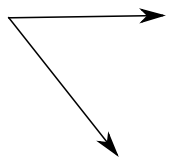	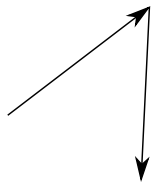	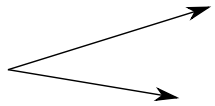

1.2

	Three forces $\overline{A}$, $\overline{B}$ and $\overline{C}$ acts on an object. Indicate whether the following statements are true or false.	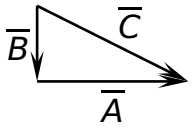	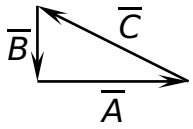
a	$\overline{C}$ is the resultant of $\overline{A}$ and $\overline{B}$.		
b	$\overline{A}+\overline{B}+\overline{C}=0$		
c	The three forces are in equilibrium.		
d	$\overline{B}$ is the resultant of $\overline{A}$ and $\overline{C}$		
e	$-\overline{C}$ is the resultant of $\overline{A}$ and $\overline{B}$		
f	The object accelerates.		

1.3 Three charged spheres are placed as indicated in the diagram.
The magnitude of the electrostatic force between between...
X and Y is 2,4 mN.
X and Z is 1,2 mN.
Calculate the net electrostatic force on X.

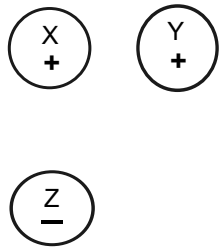

Normal force and frictional force

Normal force, N, is is the force or the component of a force which a surface exerts on an object with which it is in contact, and which is perpendicular to the surface.

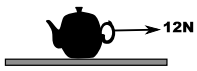			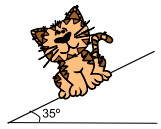
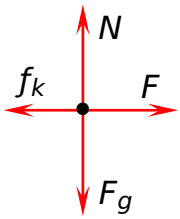	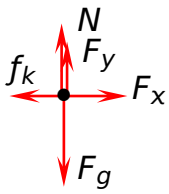	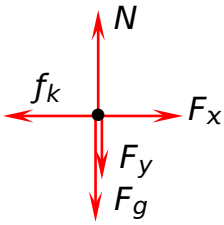	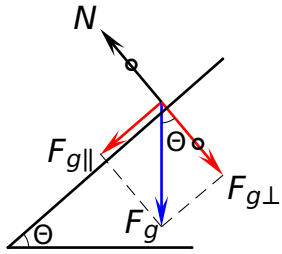
$F_{net} = 0$ (Vertical) $N = F_g$	$F_{net} = 0$ (Vertical) $N = F_g - F_y$	$F_{net} = 0$ (vertical) $N = F_g + F_y$	$N = F_{g\perp} = F_g cos\Theta$

Frictional force, f, is the force that opposes the motion of an object and which acts parallel to the surface.

Frictional force is:
- Directly proportional to the normal force (N)
- Depends on the smoothness of the surface (μ)
- Independant of contact area
- Independant of the velocity of the movement

Static frictional force, f_s, is the force that opposes the tendency of motion of a stationary object relative to a surface (parallel with the surface).

$\boxed{f_{(max)s} = \mu_s N}$ μ_s is the static frictional coefficient.

Kinetic frictional force, f_k, is the force that opposes the motion of a moving object relative to a surface (parallel to the surface).

$\boxed{f_k = \mu_k N}$ μ_k is the kinetic frictional coefficient.

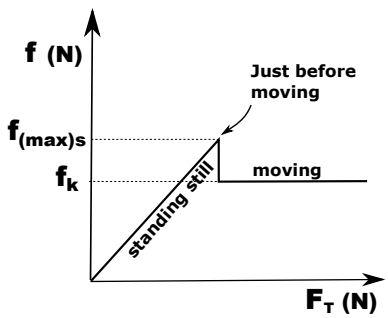

1.4

A crate (10 kg) rests on the floor. The static and kinetic frictional coefficients are 0,2 and 0,18. John exert a horisontal forces to the right on the crate.

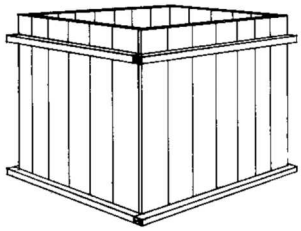

a. Draw a labelled free body diagram of the forces acting on the crate.

b. Calculate the magnitude of the maximum static friction between the floor and the crate.

c. Calculate the magnitude of the kinetic frictional force between the floor and the crate.

d. John exerts 18 N to the right on the crate. Will the crate start to move? Determine the type and magnitude of the frictional force.

e. John exerts 20 N to the right on the crate. Will the crate start to move? Determine the type and magnitude of the frictional force.

f. Draw a graph of the frictional force on the crate versus the applied force.

g. The crate is turned on its side and the contact area is reduced. How will this influence the magnitude of the kinetic frictional force? Write only SMALLER, BIGGER or CONSTANT.

Newton's Laws of Motion	
Newton I $F_{net} = 0$ a = 0 v = 0 of v = k	**Newton's first law of motion:** A body will remain in its state of rest or motion at constant velocity unless a non-zero resultant/net force acts on it.
Newton II $F_{net} \longrightarrow a$ $a \propto F_{net}$ $a \propto \frac{1}{m}$	**Newton's second law of motion:** When a resultant/net force acts on an object, the object will accelerate in the direction of the force at an acceleration directly proportional to the force and inversely proportional to the mass of the object. $F_{net} = ma$
Newton III $F_{AB} = -F_{BA}$	**Newton's third law of motion:** When one body exerts a force on a second body, the second body exerts a force of equal magnitude in the opposite direction on the first body.

Newton's third law of motion:

1.5 A girl sits on a chair.

a. Name the reaction force of the girl's **weight**.

b. Name the reaction force of the **normal force** on the girl.

1.6 Two ropes are tied to a heavy crate. One of the ropes is tied to the ceiling.

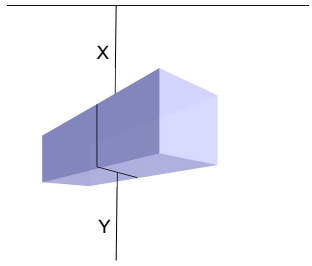

a. The lower end of the rope is pulled **quickly**. Which rope will break (X or Y)? Explain.

b. The lower end of the rope is pulled **slowly**. Which rope will break (X or Y)? Explain.

1.7 A crate of bananas is on the back of a truck. The truck stops quickly and the crate moves forward. Use scientific principles to explain this phenomenon.

Inertia is a property of matter. It is the resistance of any physical object to any change in its state of motion; this includes changes to its speed, direction or state of rest. It is the tendency of objects to keep moving in a straight line at constant velocity. Mass is a measure of the amount of inertia.

Newton I: Forces in Equilibrium

A parcel (with mass 50 kg) hangs from a rope fixed to the ceiling. The rope is supported by a beam S. Determine the tenstion in the rope T and the force exerted by the beam S on the rope at point P.

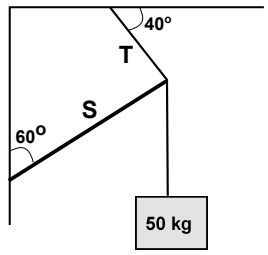

Method 1&2: With a drawing

Forces in equilibrium : $F_{net} = 0$

A head-to-tail drawing of forces should give a closed triangle.

Method 1. Scale drawing
Draw F_g first (magnitude and direction known).
For S and T (only directions is known) draw long lines in the right directions. Where the lines intercept the vectors end.

Metod 2. Calculate: sinus rule

Method 1: Scale drawing
F_g = mg = 50 × 9,8 = 490 N, down
Scale 2 mm: 10 N

2 mm: 10 N
x mm: 490 N
x = 98 mm

Measure T and S and convert with scale.
$T = 152\ N$
$S = 400\ N$

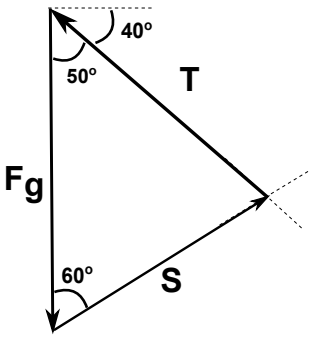

Method 2. Calculation

$$\frac{a}{\sin A} = \frac{b}{\sin B}$$
$$\frac{490}{\sin 70°} = \frac{T}{\sin 60°}$$
$$T = 451,59\ N$$

Not to sacle

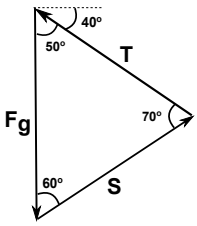

$$\frac{a}{\sin A} = \frac{b}{\sin B}$$
$$\frac{490}{\sin 70°} = \frac{S}{\sin 50°}$$
$$S = 399,45\ N$$

Method 3: With components

Forces in equilibrium: $F_{net} = 0$

For the horisontal/x-components $F_{xnet} = 0$ and for the vertical y-components $F_{ynet} = 0$

Resolve forces into components with sin and cos
Work with horisontal x-componets seperately.
Work with vertical y-componets seperately.

Method 3: With components

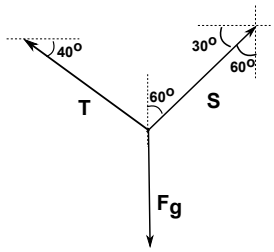

In x-direction: $F_{net} = 0$

$$\therefore T_x = S_x$$
$$T\cos 40° = S\cos 30°$$
$$S = \frac{\cos 40°}{\cos 30°}\,T$$
$$S = 0,69\ T$$

In y-direction: $F_{net} = 0$

$$\therefore F_g = T_y + S_y$$
$$F_g = T\sin 40° + S\sin 30°$$
$$(50 \times 9,8) = T\sin 40° + (0,69\ T)\sin 50°$$
$$T = 451,59\ N$$

$$S = 0,69T$$
$$= 0,69\ (451,59)$$
$$= 399,45\ N$$

Determine the mass m and the angle θ with two different methods:

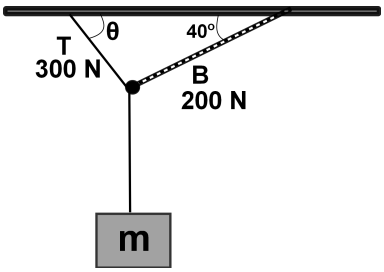

Calculation with sinus rule:	Calculation with components:

The kinetic coefficient of friction between block A and the surface is 0,2.
The pulley is frictionless.
Calculate the tension in the rope.

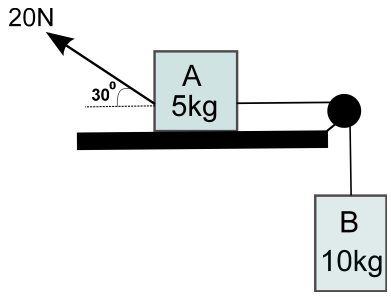

	A	B
Components		
Free-body-diagram		
N		
f_k		
F_{net}		
a		
T		

1.8 Two crates with apples are being pulled up an inclined surface with a constant force F. The inclined surface is at an angle of 30° with the earth. Crates A and B have masses of 6 kg and 4 kg. Both crates have kinetic friction coefficients of 0,2 with the surface. The crates accelerate from 2 m·s^{-1} to 2,5 m·s^{-1} over a distance of 4 m.

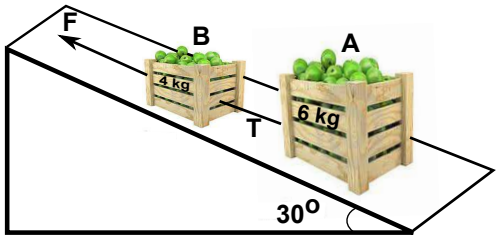

a. Are the forces on the crates in equilibrium? Explain.

b. Draw labelled free force diagrams to show ALL forces acting on the crates.

c. Use equations of motion to calculate the magnitude of the acceleration of the crates. (ans 0,28 m·s^{-2})

d. Calculate the magnitute of the tension in the rope (ans 41,26 N)

e. Calculate the magnitude of the applied force F. (ans 68,26 N)

Positive ions					
Symbol	Name	Symbol	Name	Symbol	Name
H^+	hydrogen	Be^{+2}	berillium	Al^{+3}	aluminium
Li^+	lithium	Mg^{+2}	magnesium	Fe^{+3}	iron(III)
Na^+	sodium	Ca^{+2}	calsium	Cr^{+3}	chromium(III)
K^+	potassium	Cr^{+2}	chromium(II)	As^{+3}	arsenic(III)
Ag^+	silver	Ba^{+2}	barium		
Hg^+	mercury(I)	Sn^{+2}	tin(II)		
Cu^+	copper(I)	Pb^{+2}	lead(II)		
$NH_4{}^+$	ammonium	Zn^{+2}	zinc		
		Fe^{+2}	iron(II)		
		Ni^{+2}	nickel		
		Cu^{+2}	copper(II)		
Negative ions					
Symbol	Name	Symbol	Name	Symbol	Name
F^-	floride	O^{-2}	oxide	N^{-3}	nitride
$C\ell^-$	chloride	S^{-2}	sulfide	$PO_4{}^{-3}$	phosphate
Br^-	bromide	$CO_3{}^{-2}$	carbonate		
I^-	iodide	$SO_4{}^{-2}$	sulphate		
OH^-	hydroxide	$SO_3{}^{-2}$	sulphite		
$NO_3{}^-$	nitrate	$CrO_4{}^{-2}$	chomate		
$NO_2{}^-$	nitrite	$Cr_2O_7{}^{-2}$	dichromate		
$C\ell O_3{}^-$	chlorate	$MnO_4{}^{-2}$	manganate		
$MnO_4{}^-$	permanganate	$C_2O_4{}^{-2}$	oxalate		
$IO_3{}^-$	iodate	$(COO)_2{}^{-2}$	oxalate		
CH_3COO^-	ethanoate(acetate)				

Write formules for the following compounds:

	Compound	Cation	Anion	Formula
1	sodium bromide			
2	aluminium chloride			
3	lithium oxide			
4	magnesium hydroxide			
5	sodium sulphide			
6	copper(II)iodide			
7	sodium sulphate			
8	zinc nitrate			
9	sulphur(IV)oxide			
10	ammonium carbonate			
11	potassium dichromate			
12	iron(II)sulphide			
13	manganese dioxide			
14	nickel oxalate			
15	sodium acetate			

2 Mole concept and stoichiometric calculations

Basic mole calculations

Mass	Particles	Gas at STP	Solutions
$n = \frac{m}{M}$	$n = \frac{N}{N_A}$	$n = \frac{V}{V_m}$	$c = \frac{n}{v}$ or $c = \frac{m}{Mv}$
m mass g M molar mass $g.mol^{-1}$	$N_A = 6{,}02 \times 10^{23}$ N number of particles	$V_M = 22{,}4\ dm^3 mol^{-1}$ v volume dm^3	c concentration $mol.dm^{-3}$ v volume dm^3

1. Calculate the number of water molecules in 0,25 mole of water.

2. Calculate the volume of 0,2 mole nitrogen gas at STP.

3. Calculate the number of moles of NH_3 molecules in 300 g of ammonia.

4. Calculate the mass of silver nitrate in 250 cm^3 of a 0,18 $mol.dm^{-3}$ solution.

a) 300 cm^3 solution contains 100 g NaCl. Calculate the solution concentration.	b) How many moles is 9,03 x 10^{24} NH_3 molecules?	c) How many mol CO_2(g) are there in 4,48 dm^3 at STP?
d) What is the volume of 2,7 mol N_2(g) at STP?	e) What is the mass of 3,6 mol potassium sulphate?	f) How many molecules are there in 4,2 mol ammonia?
g) Caluculate the mass of HCl(g) that fills 250 cm^3 at STP.	h) Calculate the mass of sodium carbonate in 200 cm^3 of a 0,3 $mol.dm^{-3}$ solution.	i) What volume of a 0,3 $mol.dm^{-3}$ hydrochloric acid solution contains 22,5 g hydochloric acid?
j) How many ammonia molecules are there in 33,6 dm^3 gas at STP?	k) Calculate the mass of 11,2 dm^3 of ethane gas (C_2H_6) at STP.	l) Calculate the volume occupied by 100 g of oxygen gas at ATP.

Stoichiometry

When the substance given is not the substance asked, the ratio must be used.
This step must be shown even if the ratio is 1:1

Calculate the mass Na_2O that can be produced when 4,93 dm^3 oxygen gas (at STP) reacts with an excess of sodium. $Na + O_2 \longrightarrow Na_2O$

4Na	+	O_2	$\longrightarrow$	$2Na_2O$
		n	$\longrightarrow$	n
		$\uparrow$		$\downarrow$
		$v = 4,93\ dm^3$		$m = ?$

$$n = \frac{v}{V_m}$$
$$= \frac{4,93}{22,4}$$
$$= 0,22 \text{ mol } O_2$$

O_2	:	Na_2O
1	:	2
0,22	:	x
1 × x	=	2 × 0,22
x	=	0,44 mol Na_2O

$$n = \frac{m}{M}$$
$$0,44 = \frac{m}{62}$$
$$m = 27,28 \text{ g } Na_2O$$

1. What mass of C_4H_{10} is required to react completely with 4,48 dm^3 oxygen gas at STP?

$$2C_4H_{10} + 13O_2 \longrightarrow CO_2 + 10H_2O$$

2. What mass of glucose will be produced when 100 g carbon dioxide reacts completely?

$$6CO_2(g) + 6H_2O\ (\ell) \rightarrow C_6H_{12}O_6(s) + 6O_2(g)$$

3. Calculate the volume nitogen dioxide (at STP) that will be produced when $1,5 \times 10^{24}$ N_2O_5 molecule decompose.

$$2N_2O_5(g) \rightarrow 4NO_2(g) + O_2(g)$$

4. Calculate the volume of a 0,2 mol.dm^{-3} $HC\ell$-solution that is needed to produce 3,36 dm^3 $C\ell_2(g)$ at STP.

$$2KMnO_4 + 16HC\ell \rightarrow 2KC\ell + 2MnC\ell_2 + 8H_2O + 5C\ell_2(g)$$

Volumes of gasses and stochiometry

Avogadro's law: Equal volumes of all gasses, at the same temperature and pressure, have the same number of molecules (and therefore the same number of moles).

Gas volume to gas volume calculations: Reagents (in the same container) are at the same temperature and pressure. The **volume ratio is the same as the mole ratio**.

$N_2(g) + 3H_2(g) \longrightarrow 2NH_3(g)$

Calculate the volume of ammonia gas that will be produced when 2,24 dm^3 nitrogen gas reacts completely with an excess of hydrogen gas.

$N_2(g)$	+	$3H_2$ (g)	→	$2NH_3(g)$
n			→	n
V = 2,24 dm^3				V = ?

	N_3	:	NH_3
mole ratio	1	:	2
volume ratio	1	:	2
	2,24 dm^3	:	x

4,48 dm^3 NH_3 is produced

4 The following reaction take place in a container where CONDITIONS ARE NOT STP! Calculate the volume nitogen dioxide that will be produced when 4,86 dm^3 N_2O_5 decompose.

$2N_2O_5(g) \rightarrow 4NO_2(g) + O_2(g)$

5. The following reaction occurs under non-standard conditions:

$N_2(g) + 3H_2(g) \longrightarrow 2NH_3(g)$

What volume ammoniak gas is produced when 4,48 dm^3 hydogen gas reacts completely with an excess of nitrogen gas?

When the substance given is not the substance asked, the ratio must be used. This step must be shown even if the ratio is 1:1

How many moles of $\underbrace{\text{hydrogen atoms}}_{\text{asked}}$ are there in 448 cm^3 $\underbrace{\text{ammonia gas}}_{\text{given}}$ at STP?

$$n_{NH_3} = \frac{v}{V_m}$$
$$= \frac{0,448}{22,4}$$
$$= 0,02 \text{ mol } NH_3$$

NH_3	:	H-atoms
1	:	3
0,02	:	x
1 × x	=	3 × 0,02
x	=	0,06 mol H -atoms

1. Calculate the number of moles of hydrogen atoms in 3,6 g water.

2. Calculate the number of moles of ions in 200 cm^3 of a 0,25 $mol.dm^{-3}$ zinc nitrate solution.

Limiting agents

Sodium burns in oxygen according to the following equation:

$$4Na + O_2 \rightarrow 2Na_2O$$

483 g sodium is placed in a container with 129,92 dm^3 oxygen gas.

a. Determine the limiting agent. Show all calculations.

b. Calculate the mass of sodium oxide that can be form.

c. Calculate the mass that remain of the reagent that is in excess.

4Na	+	O_2 (g)	→	$2Na_2O$
n		n	→	n
↑		↑		↓
m = 483 g		V = 129,92 dm^3		m = ?

a.

$$n = \frac{m}{M} = \frac{483}{23} = 21 \text{ mol Na available}$$

$$n = \frac{V}{V_m} = \frac{129,92}{22,4} = 5,8 \text{ mol } O_2 \text{ available}$$

For all the Na

Na : O_2

4 : 1

21 : x

5,25 mol O_2 required

O_2 available > O_2 required

∴ O_2 in excess

∴ Na limiting agent

b. Work with limiting agent

Na : Na_2O

4 : 2

21 : x

x = 10,5 mol Na_2O

$$n = \frac{m}{M}$$

$$10,5 = \frac{m}{62}$$

$$m = 651 \text{ g } Na_2O$$

c. O_2 remain = 5,8 - 5,25

= 0,55 mol

$$n = \frac{m}{M}$$

$$0,55 = \frac{m}{32}$$

$$m = 17,60 \text{ g } O_2$$

1) 100 g nitrogen and 20 g hydrogen are available. $N_2(g) + 3H_2(g) \rightarrow 2NH_3(g)$

a. Determine which reactant is the limiting agent.
b. Calculate what volume of ammonia can be produced at STP.
c. Calculate what mass of the reactant in excess will remain.

2) Calcium oxide reacts with hydrochloric acid: $CaO + 2HCl \rightarrow CaCl_2 + H_2O$

19,5 g CaO and 200 cm^3 of a 2 $mol.dm^{-3}$ HCl solution are mixed.

(a) Determine the limiting agent.
(b) Calculate the mass of $CaCl_2$ that can be produced.
(c) Calculate how many mol of the reactant in excess will remain unreacted.

3) 100 g magnesium and 336 dm^3 oxygen at STP are available.

$$2Mg(s) + O_2(g) \rightarrow 2MgO(s)$$

(a) Determine the limiting agent.

(b) Calculate the mass of magnesium oxide that can be produced?

(c) Calculate how many mol of the reactant in excess will remain unreacted.

Percentage yield and percentage purity

$$\% \text{ purity} = \frac{\text{mass of compound(theoretical)}}{\text{mass of sample}} \times 100\%$$

$$\% \text{ yield} = \frac{\text{actual yield}}{\text{theoretical yield(possible)}} \times 100\%$$

1) $N_2(g) + 3H_2(g) \rightarrow 2NH_3(g)$

42 g H_2 reacts and produces 200 g ammonia. Calculate the percentage yield.

2) $2AgNO_3(aq) + MgC\ell_2(aq) \rightarrow 2AgC\ell(s) + Mg(NO_3)_2(aq)$

100 g of silver nitrate reacts with an excess of magnesium chloride. The percentage yield for the reaction is 80%. Calculate the mass precipitate that has formed.

3) 95 g of an unpure magnesium sample is burned. 150 g magnesium oxide is produced.

a. Calculate the mass of magnesium in the sample.

b. Calculate the percentage purity of the sample.

4) 20 g of a contaminated nickel sample reacts with hydrochloric acid. If the sample is 70% pure, calculate the volume hydrogen gas that is produced at STP.

5) $2AgNO_3(aq) + MgC\ell_2(aq) \rightarrow 2AgC\ell(s) + Mg(NO_3)_2(aq)$

John reacts 139 g of $MgC\ell_2$ with an excess of silver nitrate. He produces 400 g of precipitate. What was his percentage yield?

Percentage composition

During photosynthesis glucose is produced according to the following reaction:

$$6CO_2 + 6H_2O \rightarrow C_6H_{12}O_6 + 6O_2$$

Calculate the percentage composition of glucose.

$$\% \text{ C} = \frac{72}{180} \times 100 = 40\%$$

$$\% \text{ H} = \frac{12}{180} \times 100 = 6,67\%$$

$$\% \text{ O} = \frac{96}{180} \times 100 = 53,33\%$$

Calculate the mass of carbon in 1 kg of glucose.

$$\text{mass of C} = 1000 \times \frac{40}{100} = 400 \text{ g}$$

Empirical and molecular formulae

Testosterone, the male sex hormone, contains only carbon, hydrogen and oxygen. The hormone consists of 79,12 %C, 9,79 %H and 11,09 %O by mass. Each molecule contains two O atoms. Prove that the empirical formula of the compound is $C_{19}H_{28}O_2$.

$n = \frac{m}{M}$

C: $n = \frac{79,12}{12} = 6,593$ mol

H: $n = \frac{9,79}{1} = 9,790$ mol

O: $n = \frac{11,09}{16} = 0,693$ mol

C	:	H	:	O	
$6,593$	:	$9,790$	:	$0,693$	n
$\frac{6,593}{0,693}$	:	$\frac{9,790}{0,693}$	:	$\frac{0,693}{0,693}$	Divide by smallest
$9,51$	:	$14,13$	:	1	0,5 too much to round up/down ∴ x2
19	:	28	:	2	Ratio
	$C_{19}H_{28}O_2$				Empirical formula

3 Circuits

Symbol	Term	Unit	Unit symbol
V	potential difference	volt	V
I	current	ampere	A
R	resistance	ohm	Ω
Q	charge	coulomb	C
W	energy/work	joule	J
Δt	time	seconds	s
P	power	watt	W

Series and parallel circuits.

QUESTION 1

Assume that the wire connectors have no resistance.

Indicate whether circuits A to H are identical to X:

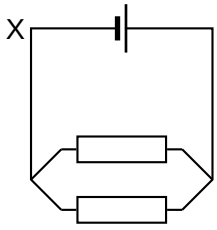

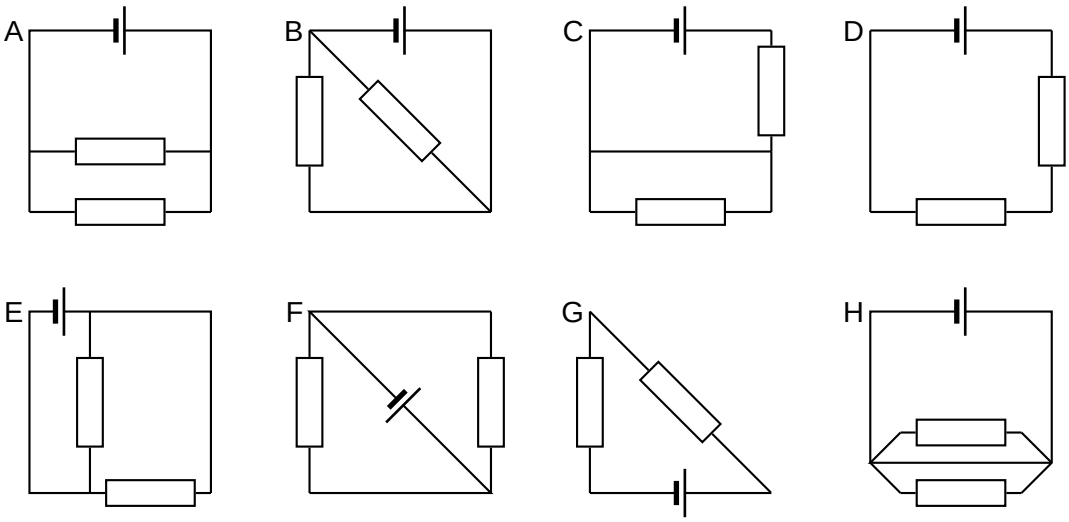

QUESTION 2

Indicate whether circuits A to H are identical to X:

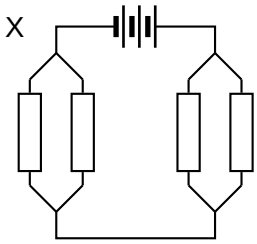

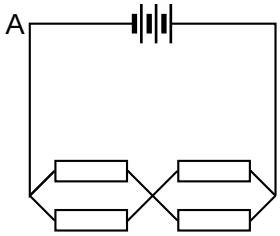

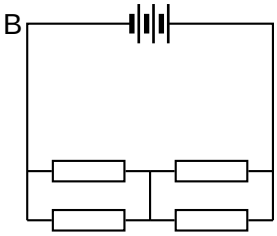

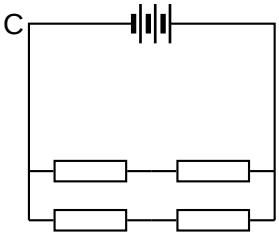

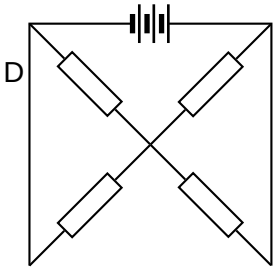

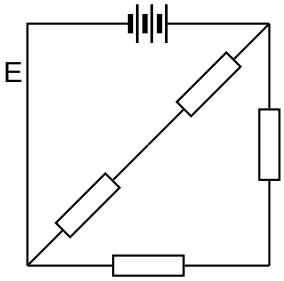

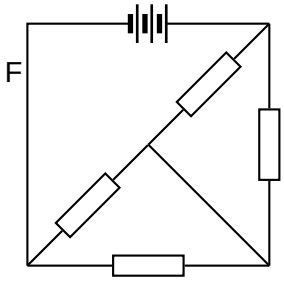

QUESTION 3

Calculate the effective resistance of thte circuit.

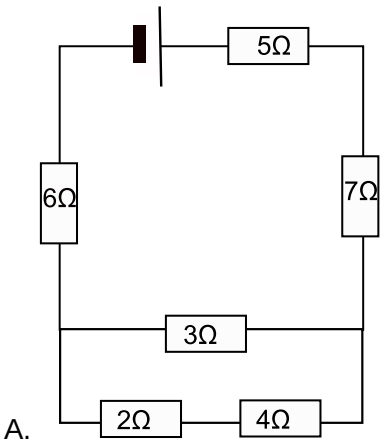

A.

Principles

	Current	Potential difference
	$Q = It$ $I = \frac{Q}{t}$ $3A = \frac{3C}{1s}$ **Rate** of flow of charge at a point in the circuit	$V = \frac{W}{Q}$ $4V = \frac{4J}{1C}$ **Energy** needed/work done to move 1C charge between two points in the circuit
SERIES 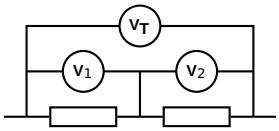 $R_T = R_1 + R_2$	Current the same everywhere.	$V_T = V_1 + V_2$
PARALLEL 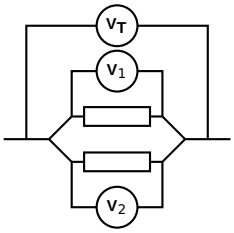 $\frac{1}{R_{\parallel}} = \frac{1}{R_1} + \frac{1}{R_2}$	$I_{series} = I_1 + I_2$	$V_T = V_1 = V_2$
Ohm's law $V = I \times R$	Use Ohm's law for: ▹ a specific resistor or ▹ the whole circuit.	
EMF and internal resistance	Energy supplied = energy used $E = V_{used\ in\ circuit} + V_{used\ in\ cell}$ $E = V_{external} + V_{internal}$ $E = IR + Ir$ $E = I(R + r)$	
Power	Power is the rate at which electrical energy is converted in Watt $P = \frac{W}{\Delta t} = VI = I^2R = \frac{V^2}{R}$	
Energy	Work done or energy converted (W or E) in Joule: $W = P\,\Delta t = VI\Delta t = I^2R\Delta = \frac{V^2}{R}\Delta t$	

QUESTION 4

Give the relationships between the ammeter readings (Ex. $I_1 = I_4$)

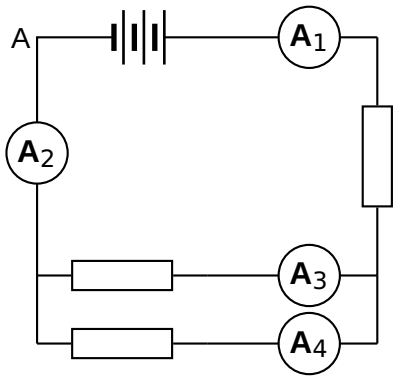

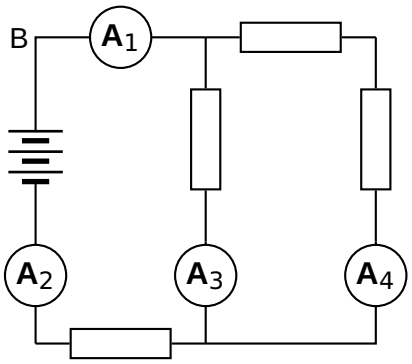

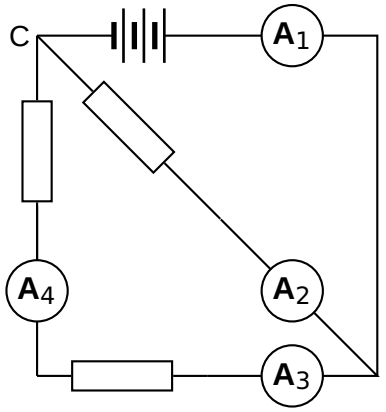

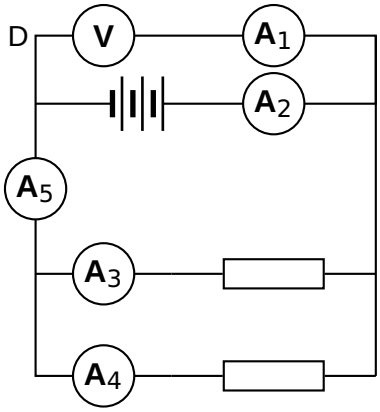

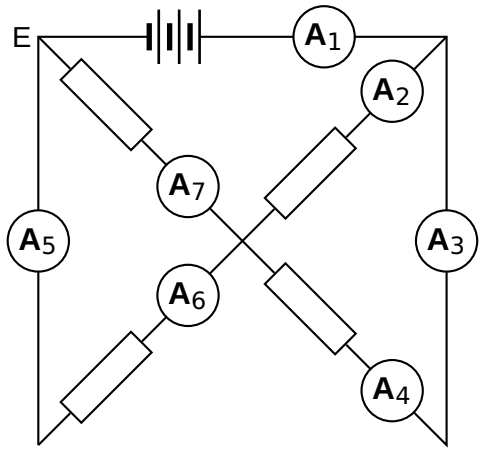

QUESTION 5

Give the relationships between the voltmeter readings (Vb. $V_1 = 2V_4$)

A

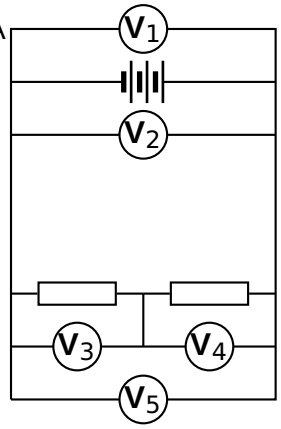

B

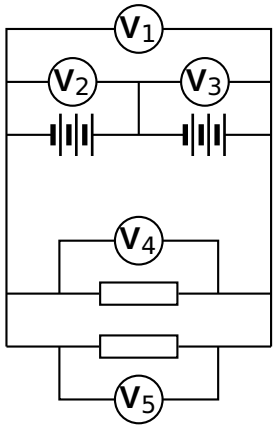

C

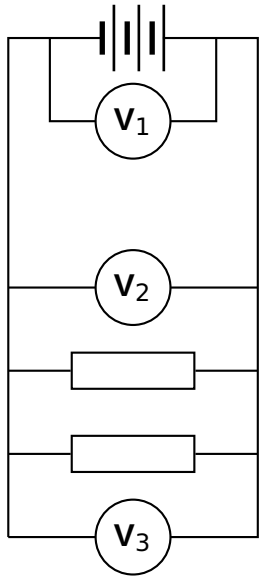

D

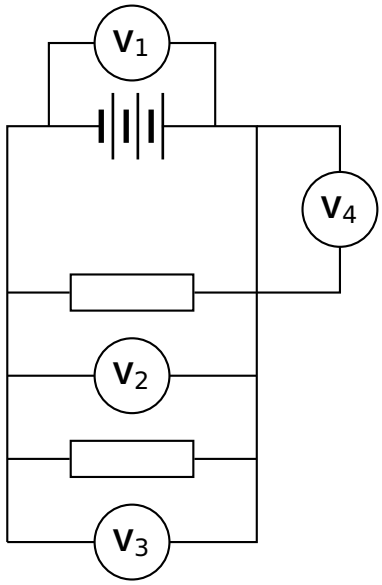

E

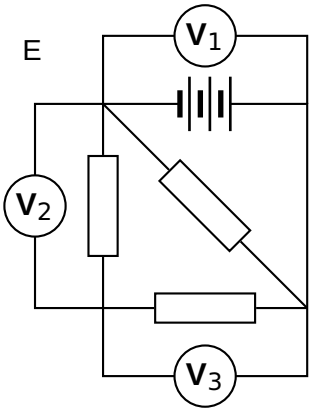

F

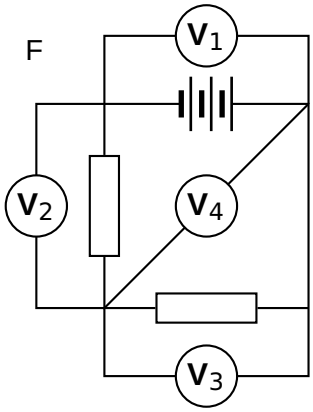

G

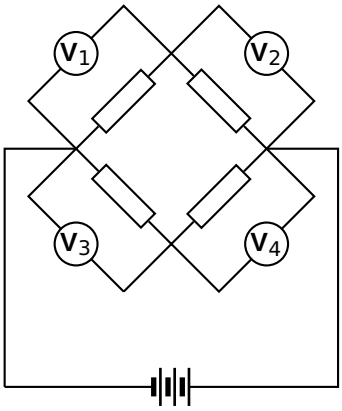

H

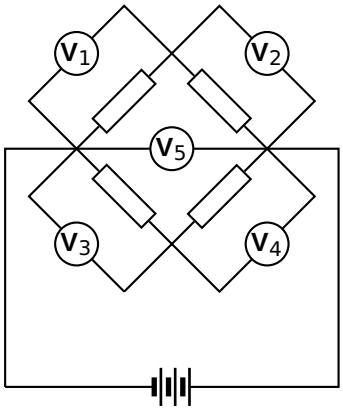

QUESTION 6

What is the potential difference measured by the unknown voltmeters?

A

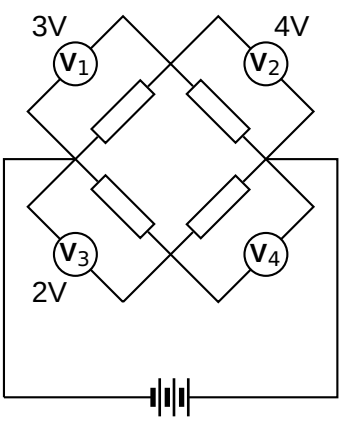

B

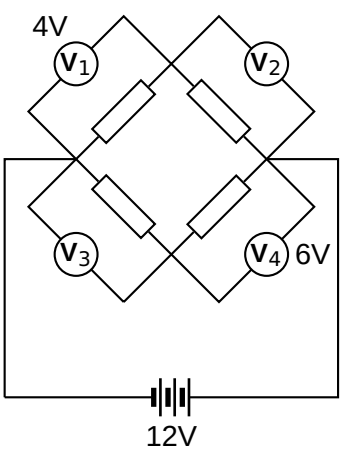

QUESTION 7

The internal resistance is negligible.

a. Determine the reading of the ammeter.

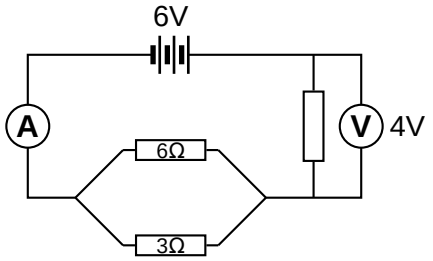

b. Determine the current on ammeter A_1.

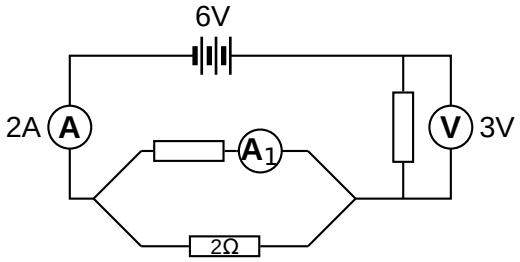

c. Determine the voltmeter reading.

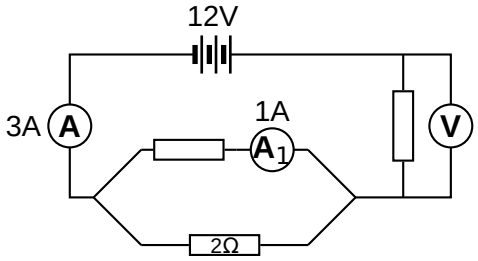

d. Calculate the value of resistor R.

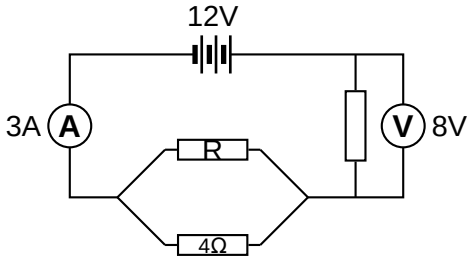

Energy, power and the cost of electricity

QUESTION 8

Electrical energy (W or E) is measured in joule (J).

$$W = Vq = VI\Delta t = I^2R\Delta t = \frac{V^2\Delta t}{R}$$

8.1 Calculate the amount of energy that is needed to send a current of 2 A for 10 minutes through a 2 Ω-resistor.

Power is the rate at which electrical energy is coverted/used in an electrical circuit.

$$P = \frac{W}{\Delta t} = IV = I^2R = \frac{V^2}{R}$$

8.2 20 000 C charge moves in 2 minutes through a resistor when the potential difference over the resistor is 12 V. Calculate the power delivered by the resistor.

Electricity use (energy) is measured in **kilowatt-hour** (kWh). 1 kWh is the energy used when 1 kW is used for an hour.

$$P = \frac{W}{\Delta t}$$ with P in kW, W in kWh and Δt in hours.

The cost of electricity:

Cost = Tariff × W (kWh)

8.3 Calculate the cost to use a 3000 W oven for 2 hours if the tariff is R 1,40 per kWh.

8.4 Calculate how long a 800 W microwave can function for R 100,00 if the tariff is R 1,80 per kWh.

QUESTION 9

9.1 Two bulbs (resistance R and 2R) are connected. Which of the bulbs will glow brighter when . . .

a. they are connected in series?
b. they are connected in parallel?

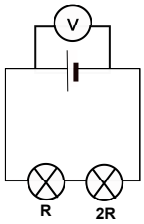

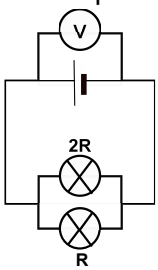

9.2 A electric heater is marked 2000 W, 240 V. The tariff for electricity is R 1,50 per kWh.

a. What does 2000 W indicate?
b. Calculate the current through the heater.
c. Calculate the energy (in kWh) needed to use the heater for 80 minutes.
d. Calculate the cost to use the heater for 80 minutes.

Internal resistance

Switch open:

Voltmeter reads EMF if connected to both sides of the cell
Voltmeter reads zero if not connected to both sides of the cell

Switch closed:

Voltmeter over cell reads Terminal potential difference (smaller than EMK)
Voltmeter reads zero if connected over a conductor, ammeter or switch
(no energy change)

The cell has an emf of 24V and a unknown internal resistance.
Give the reading on every voltmeter with the switch open and closed.
Choose from 0, 24V, more than 24V, less than 24V

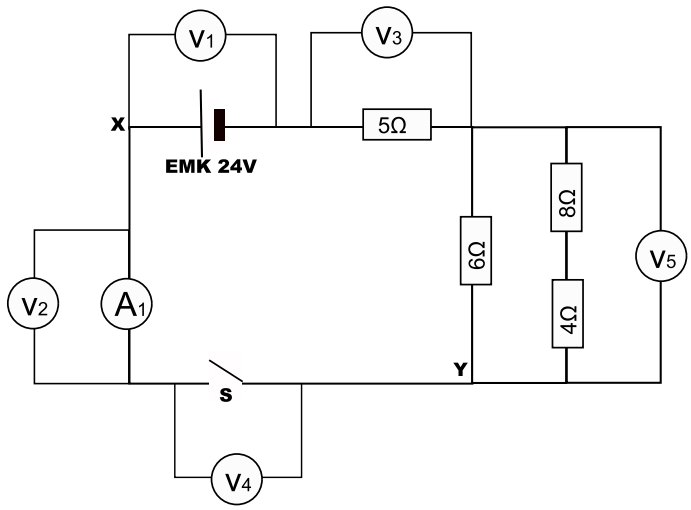

Voltmeter	Reading with switch open	Reading with switch closed
V_1		
V_2		
V_3		
V_4		
V_5		
V_{XY}		

QUESTION 10 (START ON A NEW PAGE.)

In the circuit represented below, the battery has an emf of 10 V and an unknown internal resistance. Voltmeter V_1 is connected across the battery and voltmeter V_2 is connected across the open switch, S. The resistance of the connecting wires and ammeter can be ignored.

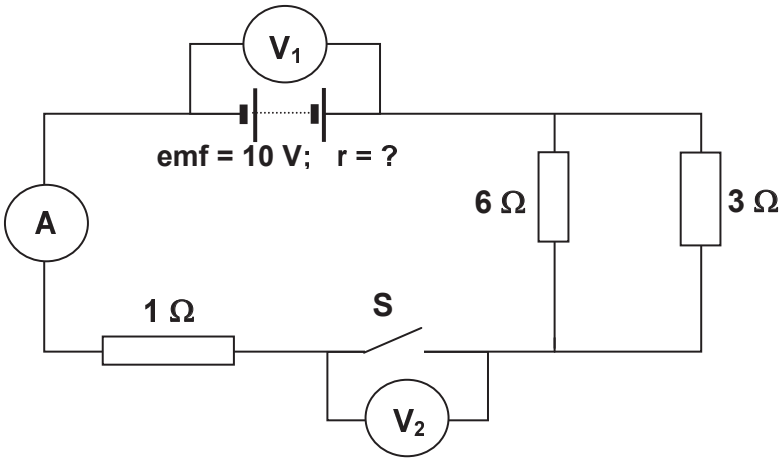

Switch S is open.

10.1 What is the reading on V_1? (2)

10.2 What is the reading on V_2? (2)

When switch S is closed, the reading on V_1 drops to 7,5 V.

10.3 What is the reading on V_2? (2)

10.4 Calculate the reading on the ammeter. (8)

10.5 Calculate the internal resistance of the battery. (5)
[19]

QUESTION 10 **[START ON A NEW PAGE]**

In the circuit represented below, the lamp L has a resistance of 43 Ω, and the internal resistance of the battery is 5 Ω. The reading on the voltmeter **decreases** by 4,5 V when switch S is closed.

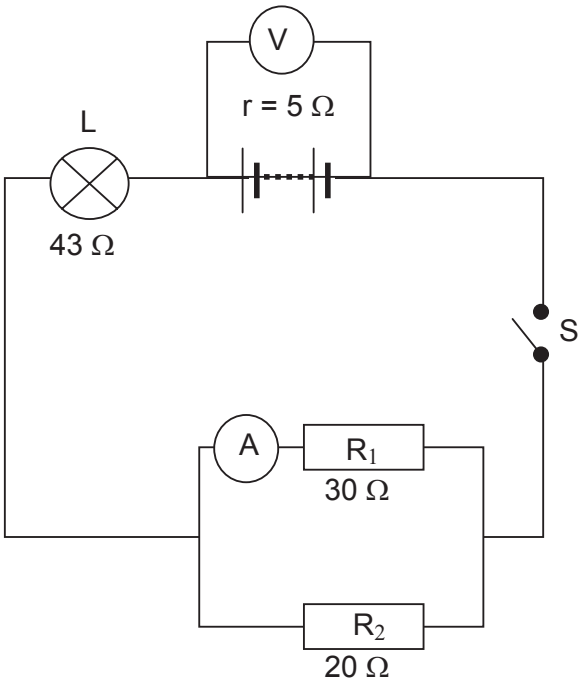

10.1 What causes this decrease in the voltmeter reading? (2)

10.2 Calculate the current in the battery when switch S is closed. (4)

10.3 Calculate the emf of the battery. (7)

10.4 Calculate the reading on the ammeter when switch S is closed. (5)

10.5 Will the power dissipated by the lamp INCREASE, DECREASE or REMAIN CONSTANT when resistor R_2 burns out while the switch is closed?
Give a reason for the answer. (3)
[21]

4 Acids and bases

Acid	Formula	Strength
Hydrochloric acid	HCl	strong
Sulphuric acid	H_2SO_4	strong
Nitric acid	HNO_3	strong
Phosphoric acid	H_3PO_4	strong
Sulphurous acid	H_2SO_3	weak
Carbonic acid	H_2CO_3	weak
Oxalic acid	$(COOH)_2$ $H_2C_2O_4$	weak
Acetic acid (etanoic acid)	CH_3COOH	weak

Base	Formula	Strength
Sodium hydroxide	$NaOH$	strong
Potassium hydroxide	KOH	strong
Lithium hydroxide	$LiOH$	strong
Calcium hydroxide	$Ca(OH)_2$	weak
Magnesium hydoxide	$Mg(OH)_2$	weak
Ammonia	NH_3	weak
Potassium carbonate	K_2CO_3	weak
Sodium bicarbonate	$NaHCO_3$	weak
Sodium carbonate	Na_2CO_3	weak

Reactions of acids

Acid and reactive metal → salt + hydrogen gas

$2HCl(aq) + Zn(s) \rightarrow ZnCl_2(aq) + H_2(g)$
$H_2SO_4(aq) + Mg(s) \rightarrow MgSO_4(aq) + H_2(g)$

Neutralisation(exothermic)
Acid and metal hydroxide → salt + water

$2HCl(aq) + Zn(OH)_2(s) \rightarrow ZnCl_2(aq) + 2H_2O(l)$
$H_2SO_4(aq) + 2NaOH(aq) \rightarrow Na_2SO_4(aq) + 2H_2O(l)$

If the base is NH_3:
$2HCl(aq) + NH_3(g) \rightarrow NH_4Cl(aq)$ or
$2HCl(aq) + NH_3(g) \rightarrow NH_4^+(aq) + Cl^-(aq)$

Acid and metal oxide → salt + water

$2HCl(aq) + ZnO(s) \rightarrow ZnCl_2(aq) + H_2O(l)$
$H_2SO_4(aq) + Na_2O(aq) \rightarrow Na_2SO_4(aq) + H_2O(l)$

Acid and metal carbonate → salt + water + carbon dioxide gas

$2HCl(aq) + ZnCO_3(s) \rightarrow ZnCl_2(aq) + H_2O(l) + CO_2(g)$
$H_2SO_4(aq) + Na_2CO_3(aq) \rightarrow Na_2SO_4(aq) + 2H_2O(l) + CO_2(g)$

Write four balanced equations to show how magnesium chloride can be prepared from an appropriate acid.

Acids Brønsted-Lowry: Proton donor	**Bases** Brønsted-Lowry: Proton acceptor
Strong acids (ionise completely) covalent → no ions → ionises $HCl(g) + H_2O(l) \rightleftharpoons H_3O^+(aq) + Cl^-(aq)$ hydrochloric acid $HNO_3(g) + H_2O(l) \rightleftharpoons H_3O^+(aq) + NO_3^-(aq)$ nitric acid $H_2SO_4(l) + 2H_2O(l) \rightleftharpoons 2H_3O^+(aq) + SO_4^{-2}(aq)$ sulfuric acid	**Strong bases** (dissociate completely) ionic → has ions → dissociate $KOH \underset{H_2O}{\rightleftharpoons} K^+(aq) + OH^-(aq)$ $NaOH \underset{H_2O}{\rightleftharpoons} Na^+(aq) + OH^-(aq)$ $LiOH \underset{H_2O}{\rightleftharpoons} Li^+(aq) + OH^-(aq)$
Weak acids (ionise incompletely) covalent → no ions → ionises $CH_3COOH + H_2O(l) \rightleftharpoons H_3O^+(aq) + CH_3COO^-(aq)$ acetic acid — acetate ion ethanoic acid — ethanoate ion $H_2CO_3 + H_2O(l) \rightleftharpoons H_3O^+(aq) + HCO_3^-(aq)$ carbonic acid $(COOH)_2 + 2H_2O \rightleftharpoons 2H_3O^+(aq) + (COO)_2^{-2}$ oxalic acid — oxylate ion	**Weak bases** (dissociate/ionise incompletely) Covalent NH_3 ionises and forms NH_4OH that weakly dissociates $NH_3 + H_2O \rightleftharpoons NH_4^+(aq) + OH^-(aq)$ Ionic $Mg(OH)_2$ dissociates incompletely $Mg(OH)_2 \rightleftharpoons Mg^{+2}(aq) + 2OH^-(aq)$

A solution of acid HX with concentration 0,15 mol.dm^{-3} is prepared. The concentration of hydronium ions in the solution is 3,2 × 10^{-6} mol.dm^{-3}.

a. Write an equation for the reaction of HX with water.

b. Is HX a strong acid? Explain.

Write balanced equations for the following reactions:
a. Reaction between magnesium hydroxide and nitric acid
b. Reaction of nitric acid and water
c. Reaction of lithium hydroxide in water
d. Reaction between oxalic acid and sodium oxide
e. Reaction of ammonia with water
f. Reaction of sulphuric acid and water
g. Reaction of sodium carbonate and hydrochloric acid
h. Neutralisation the gives potassium sulphate as product
i. Raection of oxalic acid with water
j. Preparation of sodium carbonate during neutralisation
k. Reaction between ammonia and hydrochloric acid

Conjugated acid-base pair	conjugated pair 2 base, conj acid $NH_3(g) + H_2O(\ell) \rightleftharpoons NH_4^+(aq) + OH^-(aq)$ acid, conj base conjugated pair 1 The conjugated base of a strong acid is a weak base and the conjugated acid of a strong base is weak.

a. Write down the conjugated bases for the following acids:
   a. NH_4^+ b. HSO_4^- c. H_2O

b. Write down the conjugated acids of the following bases:
   a. $H_2PO_4^-$ b. OH^- c. H_2O

Concentration	$c = \frac{n}{V}$ and $n = \frac{m}{M}$ or $c = \frac{m}{M\,V}$ (V in dm^3)
Dilutions	$\underbrace{C_1\,V_1}_{old} = \underbrace{C_2\,V_2}_{new}$ NB. New volume = original volume + added water !!

c. 25 ml water is added tot 75 ml of a 0,13 $mol.dm^{-3}$ sulphuric acid solution. Calculate the concentration of the diluted solution.

d. Calculate the mass of NaOH that must be dissolved in 240 cm^3 of water to give a 0,04 $mol.dm^{-3}$ solution.

e. Calulate the volume of water that must be added to 30 cm^3 of a 0,06 $mol.dm^{-3}$ hydrochloric solution to dilute it to a 0,04 $mol.dm^{-3}$ solution.

GEGEWENS VIR FISIESE WETENSKAPPE GRAAD 11
VRAESTEL 1 (FISIKA)

DATA FOR PHYSICAL SCIENCES GRADE 11
PAPER 1 (PHYSICS)

TABEL 1: FISIESE KONSTANTES/*TABLE 1: PHYSICAL CONSTANTS*

NAAM/*NAME*	SIMBOOL/*SYMBOL*	WAARDE/*VALUE*
Swaartekragversnelling *Acceleration due to gravity*	g	9,8 $m \cdot s^{-2}$
Swaartekragkonstante *Gravitational constant*	G	6,67 x 10^{-11} $N \cdot m^2 \cdot kg^{-2}$
Straal van Aarde *Radius of Earth*	R_E	6,38 x 10^6 m
Coulomb se konstante *Coulomb's constant*	k	9,0 x 10^9 $N \cdot m^2 \cdot C^{-2}$
Spoed van lig in 'n vakuum *Speed of light in a vacuum*	c	3,0 x 10^8 $m \cdot s^{-1}$
Lading op elektron *Charge on electron*	e	-1,6 x 10^{-19} C
Elektronmassa *Electron mass*	m_e	9,11 x 10^{-31} kg
Massa van die Aarde *Mass of the earth*	M	5,98 x 10^{24} kg

TABEL 2: FORMULES/*TABLE 2: FORMULAE*

BEWEGING/*MOTION*

$v_f = v_i + a\Delta t$	$\Delta x = v_i\Delta t + \frac{1}{2}a\Delta t^2$
$v_f^2 = v_i^2 + 2a\Delta x$	$\Delta x = \left(\frac{v_i + v_f}{2}\right)\Delta t$

KRAG/*FORCE*

$F_{net} = ma$	$w = mg$
$F = \frac{Gm_1m_2}{r^2}$	$\mu_s = \frac{f_{s(maks)}}{N}$
$\mu_k = \frac{f_k}{N}$	

GOLWE, KLANK EN LIG/*WAVES, SOUND AND LIGHT*

$v = f\lambda$	$T = \frac{1}{f}$
$n_i \sin\theta_i = n_r \sin\theta_r$	$n = \frac{c}{v}$

ELEKTROSTATIKA/*ELECTROSTATICS*

$F = \frac{kQ_1Q_2}{r^2}$ (k = 9,0 x 10^9 N·m^2·C^{-2})	$E = \frac{F}{q}$
$E = \frac{kQ}{r^2}$ (k = 9,0 x 10^9 N·m^2·C^{-2})	$V = \frac{W}{Q}$

ELEKTROMAGNETISME/*ELECTROMAGNETISM*

$\varepsilon = -N\frac{\Delta\Phi}{\Delta t}$	$\Phi = BA\cos\theta$

ELEKTRIESE STROOMBANE/*ELECTRIC CIRCUITS*

$I = \frac{Q}{\Delta t}$	$R = \frac{V}{I}$
$\frac{1}{R} = \frac{1}{r_1} + \frac{1}{r_2} + \frac{1}{r_3} + ...$	$R = r_1 + r_2 + r_3 + ...$
$W = Vq$ $W = VI\Delta t$ $W = I^2R\Delta t$ $W = \frac{V^2\Delta t}{R}$	$P = \frac{W}{\Delta t}$ $P = VI$ $P = I^2R$ $P = \frac{V^2}{R}$

DATA FOR PHYSICAL SCIENCES GRADE 11
PAPER 2 (CHEMISTRY)

GEGEWENS VIR FISIESE WETENSKAPPE GRAAD 11
VRAESTEL 2 (CHEMIE)

TABLE 1: PHYSICAL CONSTANTS/*TABEL 1: FISIESE KONSTANTES*

NAME/*NAAM*	SYMBOL/*SIMBOOL*	VALUE/*WAARDE*
Avogadro's constant *Avogadro-konstante*	N_A	$6,02 \times 10^{23}$ mol^{-1}
Molar gas constant *Molêre gaskonstante*	R	8,31 J·K^{-1}·mol^{-1}
Standard pressure Standaarddruk	p^{θ}	$1,013 \times 10^{5}$ Pa
Molar gas volume at STP *Molêre gasvolume by STD*	V_m	22,4 dm^3·mol^{-1}
Standard temperature *Standaardtemperatuur*	T^{θ}	273 K

TABLE 2: FORMULAE/*TABEL 2: FORMULES*

$\frac{p_1V_1}{T_1} = \frac{p_2V_2}{T_2}$	$pV = nRT$
$n = \frac{m}{M}$	$n = \frac{N}{N_A}$
$n = \frac{V}{V_m}$	$c = \frac{n}{V}$ OR/*OF* $c = \frac{m}{MV}$