UNIVERSITY OF PRETORIA

DOMESTIC HOT WATER HEAT PUMP

MOX 410 - DESIGN REPORT

Marilize Everts s29037078
Study Leader: Prof J.P. Meyer
4/6/2012

UNIVERSITEIT VAN PRETORIA
UNIVERSITY OF PRETORIA
YUNIBESITHI YA PRETORIA

MECHANICAL AND AERONAUTICAL ENGINEERING

MEGANIESE EN LUGVAARTKUNDIGE INGENIEURSWESE

INDIVIDUAL ASSIGNMENT COVER PAGE / INDIVIDUELE OPDRAG DEKBLAD

Name of Student / Naam van Student	
Student number / Studentenommer	
Name of Module / Naam van Module	
Module Code / Modulekode	
Name of Lecturer / Naam van Dosent	
Date of Submission / Datum van Inhandiging	
Declaration: 1. I understand what plagiarism is and am aware of the University's policy in this regard. 2. I declare that this _____ (e.g. essay, report, project, assignment, dissertation, thesis, etc.) is my own, original work. 3. I did not refer to work of current or previous students, memoranda, solution manuals or any other material containing complete or partial solutions to this assignment. 4. Where other people's work has been used (either from a printed source, Internet, or any other source), this has been properly acknowledged and referenced. 5. I have not allowed anyone to copy my assignment.	**Verklaring:** 1. Ek begryp wat plagiaat is en is bewus van die Universiteitsbeleid in hierdie verband. 2. Ek verklaar dat hierdie _____ (bv. opstel, verslag, projek, werkstuk, verhandeling, proefskrif, ens.) my eie, oorspronklike werk is. 3. Ek het nie gebruik gemaak van huidige of vorige studente se werk, memoranda, antwoord-bundels of enige ander materiaal wat volledige of gedeeltelike oplossings van hierdie werkstuk bevat nie. 4. In gevalle waar iemand anders se werk gebruik is (hetsy uit ´n gedrukte bron, die Internet, of enige ander bron), is dit behoorlik erken en die korrekte verwysings is gebruik. 5. Ek het niemand toegelaat om my werkopdrag te kopieër nie.
Signature of Student / Handtekening van Student	
Mark awarded / Punt toegeken	

ABSTRACT

Title: Domestic Hot Water Heat Pump

Author: M. Everts

Student number: 29037078

Study Leader: Prof J.P. Meyer

Commencement Date: 2012-02-28

Completion Date: 2012-06-04

South Africa is experiencing problems with energy supply and demand. The main challenge is therefore to reduce energy consumption through the implementation of energy efficient devices. Electricity has become very expensive and due to the high capital cost of solar heating systems, the resulting payback periods tend to be more than the life expectancy of the system. The cost of hot water heating contributes between 30 % and 50 % of a household's electricity cost. Hot water heat pumps have been successfully implemented in commercial buildings, but there is still room for improvement in the residential sector. The aim of this design project is to design a domestic hot water heat pump with a heating capacity of 3 kW that can be used to heat water to a temperature of 55 °C. A literature study has been done on hot water heat pump cycles, heat exchangers, refrigerants as well as the main heat pump components. A feasibility study proved that there is a need for this design, so it was followed by the concept generation and evaluation processes. After the best concepts had been identified, the condenser and evaporator were designed in detail from first principles while the compressor, pump, expansion valve, fan and suction accumulator were scientifically selected. This was followed by compilation drawings of the heat pump as well as detail and manufacturing drawings of the evaporator. The outcomes of this design report include a detail design of the system (including the hot water heat pump, storage tank, piping and cabinet). The materials and manufacturing processes were specified for the condenser and evaporator. A maintenance and reliability analysis was performed to ensure that the life expectancy of the heat pump is maximized. The total cost was determined to be approximately R23 000 and the payback period is estimated to be just over four years. A safety and environmental impact study was also done to ensure that the heat pump is environmentally friendly.

NOMENCLATURE

A	Area	m^2
A_c	Cross-sectional area of bolt	m^2
A_c	Cross-sectional area	m^2
b	Width of steel section	m
d	Diameter	m
d_c	Coil diameter	m
d_h	Hydraulic diameter	m
f	Friction Factor	
f_u	Specified minimum tensile strength	Pa
f_y	Specified minimum yield stress	Pa
G	Mass flux	kg/ m^2.s
h	Heat transfer coefficient/	W/m^2.°C
	Enthalpy	J/kg
	Height of steel section	m
	Weld size	m
h_{fg}	Latent heat of vaporization	J/kgK
H	Height	m
I	Second moment of area	m^4
I_u	Unit second moment of area	m^3
k	Thermal conductivity	W/m.°C
K_c	Pressure loss due to sudden contraction	
K_e	Pressure loss due to sudden expansion	
L	Length	m
$\dot{Q}$	Heat transfer rate	W
Q	Volumetric flow rate	m^3/s
M	Mass	kg
M_r	Factored moment resistance of member	Nm
M_u	Ultimate bending moment in member	Nm
$\dot{m}$	Mass flow rate	kg/s
N	Number of turns	
Nu	Nusselt number	
p	Perimeter	m
Pr	Prandtl number	
R	Thermal resistance	W/°C
Re	Reynolds number	
T_b	Bulk fluid temperature	°C
T_∞	Temperature of surroundings	°C
t	Thickness	m
U	Overall heat transfer coefficient	W/m^2.°C
V	Velocity	m/s
W	Work done	W
w	Width	m
Z_{pl}	Plastic section modulus of steel section	m^3

GREEK LETTERS

ρ	Density	kg/m^3
λ	Aspect ratio	
η	Isentropic efficiency	
ΔP	Pressure drop	Pa
ΔT_{ln}	Log mean temperature difference	°C
σ	Ratio of flow channels area to heat sink area	
$\varnothing$	Resistance factor for structural steel	
$\varnothing_b$	Resistance factor for bolts	
τ'	Primary shear stress	Pa
τ''	Secondary shear stress	Pa
τ	Shear stress	Pa
ν	Kinematic viscosity	m^2/s

SUBSCRIPTS

b	Bulk
C	Cold
e	Exit
f	Saturated liquid / Fin
H	Hot/ High
i	Inner/ Inlet
L	Low
o	Outer

TABLE OF CONTENTS

LIST OF FIGURES

LIST OF TABLES

1. INTRODUCTION

1.1 BACKGROUND

Electricity has become very expensive and the capital cost of solar systems is very high. In many cases, the payback periods for the solar systems are more than their life expectancy and subsequently hot water heat pumps are considered instead. Heat pumps are effective solutions to heating and cooling applications for commercial as well as domestic buildings. These systems are normally installed in the roof or on the outside of the outer wall and use the existing geyser as the water tank. Therefore the cost of installation, material and labour could be reduced. The majority of heat pumps work on the same principle as the domestic refrigerator using a vapour compression cycle where heat is transferred from a low-temperature body to a high temperature body. A refrigerant is used in the cycle as a transfer medium. Heat is transferred from the outside air to the refrigerant in the evaporator, which is at a low temperature and pressure. The compressor compresses the fluid and heat is transferred from the refrigerant, which is at a high temperature and pressure, to the water in the condenser. The fluid then flows through the expansion valve where the temperature and pressure drop before it enters the evaporator again to repeat the cycle.

1.2 PROBLEM STATEMENT

Heating water with electricity has become very expensive, but an alternative is to use hot water heat pumps instead, since it only uses about one third of the electricity consumption of a geyser.

1.3 AIM

The aim of this study is to design a domestic hot water heat pump that can be used for the heating of hot water.

1.4 USER SPECIFICATIONS

The following user requirements should be met in order to ensure a successful design:

- Heating capacity of 3 kW at a wet bulb air temperature of 10 °C and a condensing temperature of 60 °C
- Environmentally friendly refrigerant
- Suitable noise levels for installation next to the house
- Connection to a 150 liter hot water storage tank
- Water heated to a temperature of 55 °C

2.1. INTRODUCTION

Hot water heat pumps have become an alternative for heating water due to the high cost of electricity. Water heating makes up a large portion of the total energy consumption of domestic homes and these heat pumps use only about a third of the electricity consumption of a geyser.

This chapter contains an overview of vapor-compression refrigeration cycles, heat pumps and heat exchangers. The main components of a heat pump as well as the available refrigerants are also discussed.

2.2. HOT WATER HEAT PUMP CYCLE

A hot water heat pump is based in the vapour-compression refrigeration cycle. The main purpose of a heat pump is to absorb heat in one place where there is abundance (the source), and transport it in order to release it in another place where it can be used for heating (the destination). Heat pumps mostly consist of two heat exchangers, a compressor, an expansion valve and a working medium. It is based on the relation between pressure and temperature for gasses and liquids. By compressing a gas, the temperature will increase, while a lower temperature can be obtained by decreasing the pressure.

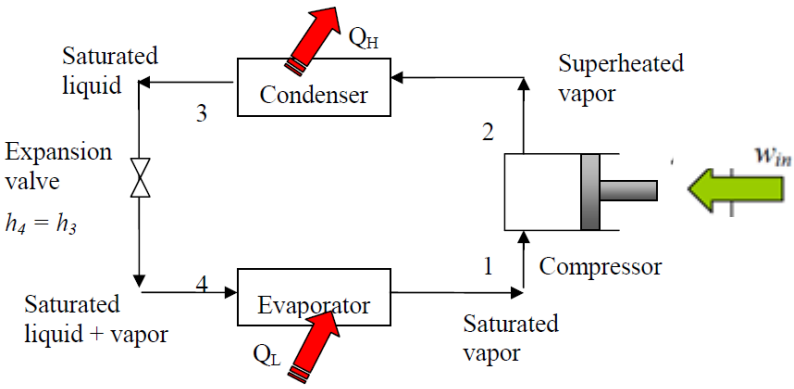

FIGURE 2.2.1: HOT WATER HEAT PUMP CYCLE

A heat pump and a refrigerator rely on the same type of machine, but with different applications. The refrigeration cycle consists of a heat exchanger that absorbs the heat and one that rejects it. The absorbed heat is transported through pipes by a refrigerant circulated by a compressor. The refrigerant has a low boiling temperature and this property is important since the refrigerant fluid boils from a liquid to a vapour and then continuously condenses back into a liquid. The refrigerant is transported to the evaporator (cold heat exchanger) where it evaporates into vapour by absorption of heat (thermal energy) from the heat source (ambient air), passing through the heat exchanger. The return vapour is then drawn back to the compressor. The heat from the source, as well as the waste energy of the electric motor is compressed in order to obtain a higher pressure and temperature before it enters the

condenser (warm heat exchanger) where it is cooled while heating the water flowing through it. The refrigerant then passes through the expansion valve in order for the pressure and temperature to be reduced before it reaches the evaporator again (Heat Pump Association, n.d.).

2.2.1. IDEAL VAPOUR-COMPRESSION REFRIGERATION CYCLE

From the First Law of Thermodynamics, the heat absorbed by the evaporator ($\dot{Q}_C$) and heat rejected by the condenser ($\dot{Q}_H$) are assumed to be an internally reversible, constant pressure processes and can be calculated as follow:

$$\dot{Q}_H = \dot{m}(h_2 - h_3) \tag{2.1}$$

$$\dot{Q}_C = \dot{m}(h_1 - h_4) \tag{2.2}$$

The work done by the compressor is assumed to be reversible and adiabatic (isentropic) and can be calculated as follows:

$$W_C = \dot{m}(h_2 - h_1) \tag{2.3}$$

The throttling process, in which the temperature and pressure decreases, is also considered as irreversible, thus the enthalpy remains constant and $h_3 = h_4$.

The coefficient of performance (COP) indicates how much energy is exploited in relation to the energy consumption, thus it is a ratio of the change in specific enthalpy across the evaporator to the change in specific enthalpy across the compressor. It varies with the difference in temperature difference, thus a larger temperature difference will result in a lower COP.

$$COP = \frac{h_2 - h_3}{h_2 - h_1} \tag{2.4}$$

The following assumptions are made for ideal vapour-compression cycles (Bahrami, n.d., p. 2):

- Negligible irreversibilities in the compressor, condenser and evaporator
- The pressure in the condenser and evaporator remains constant
- No frictional pressure drops in the system
- Negligible heat losses to the surroundings
- Isentropic compression process

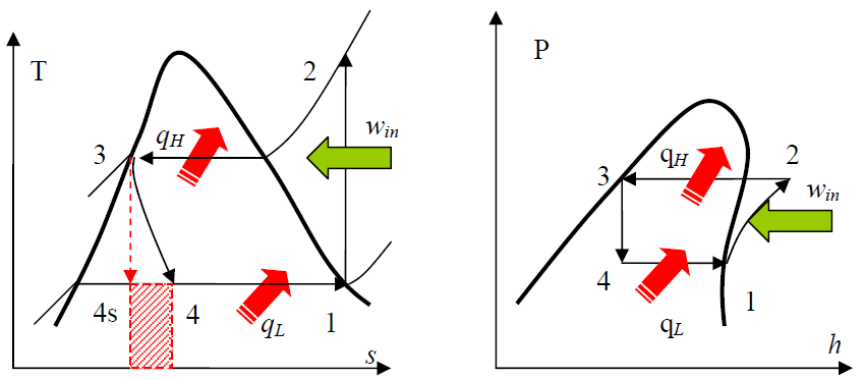

FIGURE 2.2: IDEAL VAPOUR-COMPRESSION REFRIGERATION CYCLE

2.2.2. ACTUAL VAPOUR-COMPRESSION REFRIGERATION CYCLE

The actual cycle differs from the ideal cycle due to irreversibilities that are mainly caused by friction. The following deviations from the ideal cycle can be observed in the actual cycle: (Bahrami, n.d., p. 4)

- Fluid friction causes a pressure drop across the evaporator, thus $P_1 < P_4$
- Heat transfer and pressure drop occur in the suction line between the evaporator and compressor.
- The refrigerant enters the compressor as superheated vapour.
- The entropy of the working fluid increases due to mechanical and fluid friction in the compressor, as well as heat transfer to the surroundings. The process is not isentropic anymore, but the enthalpy can be calculated by making use of the isentropic efficiency:

$$\eta = \frac{h_{2'} - h_1}{h_2 - h_1} \tag{2.5}$$

- Fluid friction causes a pressure drop across the condenser as well, thus $P_3 < P_2$
- Friction and heat exchange to the surroundings in the pipes cause pressure drops as well as an increase or decrease in temperature, depending on the temperature of the refrigerant and the surroundings.
- The refrigerant leaves the condenser as a sub-cooled liquid. This sub-cooling process increases the cooling capacity and prevents vapour from entering the expansion valve.

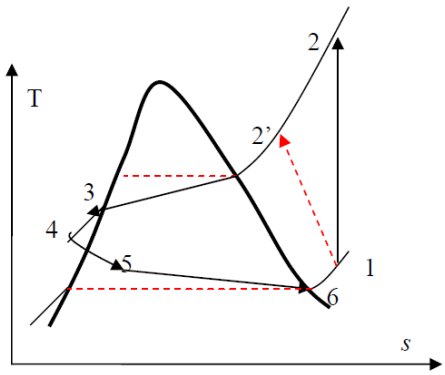

FIGURE 2.3: REAL VAPOUR-COMPRESSION REFRIGERATION CYCLE

2.3. HEAT EXCHANGERS

Heat exchangers facilitate the exchange of heat between two fluids that are at different temperatures while keeping them from mixing with each other. This involves convection in each fluid and conduction through the wall separating the two fluids and the rate of heat transfer depends on the magnitude of the temperature difference.

Different types of heat transfer applications require different types of heat exchangers. For example, certain heat exchangers are designed for gas-to-gas applications, while others are specifically designed for industrial applications. The main types of heat exchangers are listed below (Cengel, 2006, pp. 610-612):

- Double-pipe (coil/tubular) heat exchanger
- Shell-and-tube heat exchanger
- Plate-and-frame heat exchanger
- Regenerative heat exchanger

The double-pipe or coil heat exchanger is the simplest type and consists of two concentric pipes of different diameter. Two types of flow are possible in this heat exchanger, namely parallel and counter flow. In parallel flow, both fluids enter the heat exchanger at the same end and move in the same direction. In counter flow, the two fluids enter at opposite ends and flow in opposite directions.

The shell-and-tube heat exchanger is mostly used in industrial applications. It contains a large number of tubes packed in a shell with their axes parallel to that of the shell. Heat transfer takes place while one fluid flows inside the tube and the other over the tubes inside the shell. Heat transfer can be improved by placing baffles in the shell to force the shell-side fluid over the shell. These heat exchangers are relatively large and heavy and are thus not suitable for use in automotive and aircraft applications. Shell-and-tube heat exchangers can further be classified as one-, two- or four-tube-passes, depending on the amount of U-turns which the tubes make in the shell. The advantages and disadvantages of these heat exchangers are summarized below (HubPages, 2012):

TABLE 2.1: ADVANTAGES AND DISADVANTAGES OF SHELL-AND-TUBE HEAT EXCHANGERS

Advantages	**Disadvantages**
Lower cost compared to plate heat exchangers	Lower heat transfer efficiency compared to plate heat exchanger
Suitable for higher operating temperatures and pressures	Cleaning and maintenance difficult since sufficient clearance at one end is required to remove tube nest
Smaller pressure drop across heat exchanger	Capacity cannot be increased
Leaks easily detected since pressure tests can be performed relatively easily	Requires more space compared to plate heat exchangers

The plate and frame heat exchangers consist of a series of plates with corrugated flat flow passage. The hot and cold fluids flow in separate passages and effective heat transfer is obtained due to the fact that the cold fluid stream is surrounded by two hot fluid streams. These heat exchangers are suitable for liquid-to-liquid heat exchange applications if both liquids are at the same temperature. The advantages and disadvantages of the plate and frame are summarized in the following table (HubPages, 2012):

TABLE 2.2: ADVANTAGES AND DISADVANTAGES OF PLATE-AND-FRAME HEAT EXCHANGERS

Advantages	**Disadvantages**
Simple and compact in size	High initial cost
Higher heat transfer efficiency	Leakage difficult to find since pressure test not easy to perform
Easy to clean	Operating temperature of cooler is limited by bonding material between plates
Increase capacity by introducing plates in pairs	Higher pressure drop compared to tube coolers

Low and simple maintenance	Dismantling and assembling need to be done carefully
Turbulent flow helps to reduce deposits which would interfere with heat transfer	Increased pressure drop caused by over-tightening of clamping bolts
	Deterioration of joints due to operating conditions
	Not suitable for large pressure differences at high operating pressures

The regenerative heat exchanger also involves the alternate passage of hot and cold fluid streams in the same flow area. It is also further classified between dynamic and static types. The static-type heat exchanger consists of a porous mass with a large heat storage capacity and hot and cold fluids flow through this mass alternatively. Heat is transferred from the hot fluid to the matrix and then from the matrix to the cold fluid. The dynamic-type involves a rotating drum and continuous flow of the hot and cold fluids through different portions of the drum.

2.4. COMPONENTS OF A HEAT PUMP

A heat pump consists mainly of four components, namely a compressor, condenser, expansion valve and evaporator. These components will be briefly discussed below.

2.4.1. COMPRESSORS

The compressor is one of the most important parts of a heat pump, because it compresses the refrigerant to very high pressures while increasing the temperature as well. Thus the refrigerant enters the compressor at a low temperature and pressure and exits at a high temperature and pressure. The compressor consumes the maximum amount of energy in the heat pump, because external work needs to be supplied in the form of electric power to transfer the heat from a low temperature reservoir to a high temperature reservoir.

Compressors are divided in two categories namely dynamic and positive displacement. Dynamic compressors involve continuous-flow and are characterized by rotating impellers to add pressure and velocity to a fluid. These compressors are significantly smaller than positive displacement compressors and less vibration is also produced. It includes centrifugal and axial flow compressors. A centrifugal compressor applies inertial forces to the gas by means of rotating impellers. The fluid low enters the compressor in an axial direction and is radially discharged from the impeller at a right angle to the axis of rotation. The gas fluid flows from the impeller through a circular diffuser to increase the pressure and decrease the velocity. The advantages and disadvantages are summarized in the table below:

TABLE 2.3: ADVANTAGES AND DISADVANTAGES OF CENTRIFUGAL COMPRESSORS

Advantages	**Disadvantages**
High efficiency approaching two stages reciprocating compressors	Limited capacity control modulation, thus requires unloading for reduced capacities

High pressures can be obtained	Control and monitoring systems are complicated
First cost improves as size increases	High initial cost
Designed to give lubricant free air	Special bearings and sophisticated vibration and clearance monitoring required for high rotational speed
Special foundations aren't required	Specialized maintenance considerations

Axial flow compressors are mainly used for gas turbines. The fluid flow enters and exits in an axial direction which is parallel to the axis of rotation. The gas is compressed by first accelerating the fluid by means of a row of rotating blades and then diffusing it to increase the pressure by means of a row of stationary blades. The advantages and disadvantages are summarized in the table below (Kolmetz, 2011):

TABLE 2.4: ADVANTAGES AND DISADVANTAGES OF AXIAL FLOW COMPRESSORS

Advantages	**Disadvantages**
High peak efficiency	Good efficiency over narrow rotational speed range
Small frontal area for given airflow	Difficult to manufacture and high cost
Straight-through flow	High weight
Number of stages increase pressure rise with negligible losses	High starting requirements

There are mainly two types of positive-displacement compressors namely reciprocating and rotary compressors. A rotary compressor compresses the incoming fluid with a rotor which is inside a closed chamber. These compressors are classified as screw compressor, vane type compressor, lobe and scroll compressor, depending on their rotating device. The advantages and disadvantages of these compressors are summarized below:

TABLE 2.5: ADVANTAGES AND DISADVANTAGES OF ROTARY COMPRESSORS

Advantages	**Disadvantages**
Simple and compact design	High rotational speed
Relatively low initial and maintenance cost	Shorter life expectancy compared to other designs
Good efficiencies obtained by two-stage design	Lower efficiency obtained by single-stage design
Easy installation	Difficulty with dirty environment
Few moving parts	
Lower noise levels	

Reciprocating compressors consist of a piston and cylinder arrangement that is similar to reciprocating engines and the reciprocating action helps with compressing the refrigerant. Compressors produce compression by consuming power and reciprocating compressors consume more power than rotary compressors. The advantages and disadvantages of these compressors are summarized in the following table:

TABLE 2.6: ADVANTAGES AND DISADVANTAGES OF RECIPROCATING COMPRESSORS

Advantages	**Disadvantages**
Simple design	High maintenance cost
Easy installation	Many moving parts
Low initial cost	Vibration problems may occur
Large power range	Foundation may be required, depending on size
Very high pressures can be obtained by special machines	Usually not designed to run at full capacity
Highest efficiency obtained by two-stage models	

By comparing the different compressor types, it appears that the rotary scroll compressor is a better option and the latter is fast replacing the reciprocating compressors in heat pumps, as well as air conditioners.

In order to ensure that no liquid refrigerant enters the compressor, suction accumulators are installed close to the compressor in the suction line. This provides a temporary storage for any liquid refrigerant and oil that is returning from the evaporator to the compressor. This is very important since compressors are designed to compress refrigerant vapour only, thus any liquid entering the compressor has the potential to damage its internal components. Suction accumulators are typically installed in Low-Temperature refrigeration systems and heat pumps and are compulsory for systems that may experience low return vapour superheat readings at the compressor's suction service valve (Heldon, 2009).

2.4.2. CONDENSER

The purpose of the condenser is to produce the heating effect that is needed for the heat pump to heat the water. The refrigerant leaves the compressor as a vapour at a high temperature and pressure and then enters the condenser. A condenser reaches high temperatures due to the high temperatures of the refrigerant, thus it serves as a source to deliver heat. There is a significant temperature difference between the refrigerant and the water in the storage tank and this causes the refrigerant to release heat to the water through the pipes in the condenser in the tank. Although the temperature of the refrigerant decreases, the pressure drop is small and this causes the refrigerant to the change phase from a vapour to a liquid.

There are various ways to enhance the heat transfer in condensers, for example twisted tape inserts, finned tubes, helical micro-fin tubes, herringbone tubes and corrugated tubes. These heat transfer enhancement methods will be briefly discussed:

- Twisted tape inserts
  Twisted tape inserts are frequently used as an inexpensive heat transfer method because of their low fabrication and installation costs and easy maintenance. Their main disadvantage, however, is the significant pressure drop increase which is a common result of heat transfer enhancement methods (Kanizawa, et al., 2011, p. 243).

- Finned tubes
  Heat transfer from finned tubes is greater than that of plain tubes because the heat transfer surface area is significantly increased by the fins. The finned tubes exhibit a short condensing length over the fin compared to the tube diameter as well as surface tension drainage forces along the fin. Integral finned tubes are relatively inexpensive (Kedzierski, et al., 2003, p. 728).

- Micro-fin tubes
  A study done by Liebenberg (2001) proved that helical micro-fin tubes can increase the heat transfer coefficient up to 200 % compared to smooth tubes, but this also led to a 100 % pressure drop increase. The drastic pressure drop increase is due to the increased vapour velocities caused by the greater regions of annular flow (Olivier, et al., 2007, p. 610).

- Herringbone tubes
  Herringbone tubes are a new generation of micro-fin tubes which were developed in the mid-1990's and consist of a double chevron-shaped tube with embossed micro-fins. A heat transfer enhancement of up to 350% can be obtained with these tubes. Greater heat transfer and pressure drop can also be obtained by increasing the helix angle. A fin height of up to 0.18 mm increases the heat transfer and pressure gradient. The heat transfer and pressure drop in herringbone tubes is greater compared to that in micro-fin tubes (Olivier, et al., 2007, pp. 610-611).

- Corrugated tubes
  These tubes have higher heat transfer rates since extra turbulence is introduced when breaking up the film layer close to the tube wall. The increase in heat transfer leads to a smaller heat transfer area needed, therefore shorter heat exchangers are required. This results in a compact and economic design. Pumping power and cost will also be reduced since the pressure drop across the shorter length will be reduced. The extra turbulence in the corrugated tubes will also reduce the effect of fouling (HRS Heat Exchangers, 2012).

The efficiency of the condenser can further be increased by the geometry and type of heat exchanger. Due to the high pressure in the condenser, cylindrical heat exchangers will be considered instead of cubic heat exchangers. Cubic heat exchangers, such as plate heat exchangers, are suitable for low and medium pressure applications. Cylindrical heat exchangers, for example tubular heat exchangers, are suitable for high pressure applications. Multi-pass heat exchangers and tubular heat exchangers will mainly be considered as possible geometries for the condenser and will be discussed briefly:

- Multi-pass heat exchangers
  The performance of a heat exchanger can be significantly improved if the fluids pass each other several times inside the heat exchanger. These heat exchangers are highly efficient and can save considerable amounts of energy. The flow in the tubes is usually reversed by one or more sets of U-bends in the tubes which allow the fluid to flow back and forth across the length of the heat exchanger. Baffles can also be inserted on the shell side of the heat exchanger to direct the fluid back and forth across the tubes (Engineers Edge, n.d.).

- Tubular heat exchanger with an annular space
  These heat exchangers contain three concentric tubes. The product flows in the middle annulus, while the working fluid flows in the inner and outer channels. The product will therefore be heated from both sides, leading to higher efficiencies. By using corrugated or enhanced tubes, the heat transfer rates can be increased even more (HRS Heat exchangers, 2012).

- Multi-tubular heat exchanger
  It contains a shell with multiple inner tubes and is ideal for steam to water applications. The inner tubes can also be corrugated or enhanced to improve the efficiency even more. These heat exchangers, however, are large and weigh a lot due to the multiple tubes (HRS Heat Exchangers, 2012).

- Double tube heat exchanger
  The inner tube is usually enhanced on the outside to increase the heat transfer area and contains the working fluid. The product, for example water, will then flow through the outer tube. Multiple units can be interconnected and mounted in a frame for large duties (HRS Heat Exchangers, 2012).

- Tube-in-tube helical heat exchanger
  This is a double tube heat exchanger that has been coiled. The curvature of these heat exchangers produces a secondary flow field with a circulatory motion in the tube. Due to the pushing action of the fluid particles to the core region of the tube, the heat transfer in these heat exchangers can be between 2 and 3 times higher compared to straight tubes. They are also good options if space is limited (Kumar, et al., 2006, pp. 4403-4416).

2.4.3. EXPANSION VALVES

The expansion valves reduce the pressure of the refrigerant and the temperature will decrease as well. The refrigerant leaves the expansion valve at a very low temperature and pressure.

There are mainly three types of expansion valves used in heat pumps, namely thermal expansion valves, electronic expansion valves and capillary tubes. Thermal expansion valves (TEVs) are also called "metering devices" because the mechanism controls the amount of refrigerant flow into the evaporator. This is important because the flow into the evaporator must be limited in order for the temperature of the refrigerant to decrease. Although these expansion valves are commonly used, their performance is limited due to the minimum pressure drop required between condensation and evaporation. This prevents the possible advantages of low condenser pressure.

Electronic expansion valves (EEVs) control the refrigerant flow with a pressure sensor and temperature sensor. A stepper motor is controlled by an electronic controller and rotates a fraction of a revolution for every signal that is sent to it. Pressure, temperature and superheat control is done by the pressure transducers that are wired to the controller. The advantages of these expansion valves are (MasterTherm, 2006):

- Optimization of the use of the evaporator, which leads to better efficiency of the heat pump
- Greater simplicity of design and installation since the magnetic and reverse valves of the TEV are now replaced with a single component
- The overall operational reliability is increased since fewer components reduce the chance of technical failures
- Lower noise levels are obtained compared to the TEV
- The lifespan of the equipment is extended because the compressor is exposed to less operating stress
- Technical problems can be fixed by switching over to manual mode and making adjustments to the system

Capillary tubes are used as the expansion valves in smaller systems, for example household refrigerators and freezers, as well as room air-conditioners. This is the simplest type of metering device and consists only of a small diameter tube that meters the tube from the condenser to the evaporator. It is also significantly cheaper compared to EEV's and TEV's, therefore this type of expansion valve will be considered for the heat pump design.

2.4.4. EVAPORATORS

After leaving the expansion valve at a low temperature and pressure, the liquid refrigerant enters the evaporator coil which is usually a copper coil. Heat is absorbed from the ambient air which causes the temperature of the refrigerant to increase while the pressure remains fairly constant, hence the refrigerant is converted to a gas.

The refrigerant is now at medium temperature and low pressure and enters the compressor again to repeat the cycle. Plate-and-tube heat exchangers will be considered for the evaporator due to the lower pressure. There are also different types of finned evaporators, including partial fin, single fin, or spine fin evaporators. The different types will be briefly discussed below:

- Partial Fin
  The fins in these heat exchangers are divided into separate smaller fins, therefore good contact between the fins and air can be obtained. The refrigerant tubes are completely surrounded by the fins and the pitch of the fins can also be adjusted. By making use of continuous tubing, U-bend welding is not needed and the welding points and leaking problems are significantly reduced.
  SOFT (Split, Oval Fin & Tube) Type heat exchangers are regarded as the most efficient evaporators in the world. Air flow separation is located farther, compared to round tubes, and the air flow resistance can be reduced by up to 50%. The contact between the air and the fins can further be increased by making use of a zigzag arrangement for the refrigerant tubes.

- Finned tube
  These comprise several turns of usually copper tubing which is fitted with plates. The contact surface is increased by the fins, thus the heat transfer rate is increased and this leads to a more efficient evaporator. The effectiveness of the heat transfer can be

further increased by adding internal fins in the tubes. These fins are made by forming different internal cross section shapes during the manufacturing process.

- Spine Fin
  These heat exchangers are formed by wrapping a ribbon of material with spine fins extending perpendicularly around an elongated tube.

- Plate surface
  These heat exchangers are commonly found in household refrigeration applications. Externally it looks like a single plate, although it contains several turns of tubing through which the refrigerant flows, since these tubes are embedded in the plate. They are rigid, easy to clean and relatively cheap to manufacture. Furthermore, these heat exchangers can be easily formed in different shapes; therefore they are commonly formed into box shapes to form a closed enclosure (Khemani, 2010):

2.5. REFRIGERANTS

There are several refrigerants available when designing a refrigeration system; however, the best choice depends on the situation. Many of the well-known refrigerants contribute to the hole in the ozone layer and global warming; research, therefore, focuses on finding environmentally friendly refrigerants with adequate performance.

R12 was used for refrigeration systems at higher temperature levels, for example water chillers and air-conditioning, but it was banned due to its ozone layer depletion effects.

R-22 (also known as HCFC-22) has been used for lower temperature applications such as domestic heat pumps and air-conditioning systems for more than four decades. It has less chlorine, which makes it slightly better for the environment, but unfortunately this refrigerant is still harmful to the ozone-layer and the manufacturing of it results in a by-product, HFC-23, which contributes to global warming.

Although Ammonia is corrosive and toxic, it was used in absorption systems because it is cheap and has a high COP.

R134a, also known as Tetrafluoroethane (CG3CH2F) is an HFC refrigerant that contains no chlorine and was developed in 1991to replace R-12 CFC refrigerants. The ASHRAE gave R134a a rating of A1 for safety (Airconditioning-Systems.com, 2011).

The Montreal-Protocol in 1978 was an international environmental agreement to phase out chlorofluorocarbons (CFCs) due to the fact that it causes damage to the ozone layer. R-410A was developed in response to the amendment of the Montreal Protocol in 1992 to replace R-22. It is environmentally friendly and contains no chlorine. Due to its lower boiling point, it can be operated at higher pressures than other refrigerants and heat pumps can operate in places with a lower ambient temperature. The compressors, pipes and valves can therefore be made stronger to operate at the higher pressure and this leads to stronger heat pumps. This refrigerant absorbs and releases energy more efficiently, which enables compressors to run at lower temperatures and reduce the risk of burning out due to overheating. It has zero ozone

depletion potential and an American Society of Heating, Refrigeration and Air-Conditioning Engineers (ASHRAE) safety rating of A1 (FireFly Heat Pumps, 2011).

The following factors should be considered when choosing a refrigerant (Bahrami, n.d., pp. 4-5):

- Ozone depletion and global warming potential
  This is caused by CFC's since it allows more ultraviolet radiation into the earth's atmosphere. CFC refrigerants that are banned include R-11. R-12 and R-115.

- Combustibility
  This includes all hydro-carbon fuels for example propane.

- Leak detectability
  The saturation pressure of the refrigerant at the evaporator should be higher than the atmospheric pressure.

- Thermal factors
  The refrigerant's heat of vaporization should be high, since the refrigeration effect per kg of fluid circulated increases for higher h_{fg}.
  The refrigeration effect per kg of refrigerant increases when the specific heat of the refrigerant decreases, as less heat is transferred during the throttling process and flow in the pipes.
  The work required per kg of refrigerant circulated can be minimized if the specific volume of the refrigerant is low, since the evaporation and condensing temperatures are fixed by the temperature of the surroundings. The selection should be based on the operating pressures in the condenser and evaporator.

- Other characteristics, for example chemical stability, flammability and cost.

R-134a will be used for this design, since it is not only environmentally friendly, but a vast amount of data is readily available.

2.6. FOULING

With time, deposits accumulate on the heat transfer surfaces and this leads to a deterioration of the heat exchanger's performance due to the additional resistance to heat transfer. The precipitation of solid deposits in a fluid on the heat transfer surfaces is the most common form of fouling. Corrosion is another form of fouling and is common in chemical processes where the products of the chemical reactions accumulate on surfaces. Biological fouling involves growing algae and occurs when heat exchangers operate with warm fluids.

To compensate for the negative effects of fouling, it is often necessary to select larger and more expensive heat exchangers to ensure that the design heat transfer requirements are met. The fouling factor is a measurement of the thermal resistance due to fouling and increases with time. It is dependent upon the length of service as well as the operating temperature and velocity of the fluid. When the specific fouling data is unavailable, it can be considered that the surfaces are coated with 0.2 mm of limestone. This can be used as a starting point to account for the effects of fouling (Cengel, 2006, pp. 615-617).

2.7 CONCLUSION

Heat pumps and their main components, heat exchangers and refrigerant types, as well as fouling have been investigated. It can be concluded that a double-tube heat exchanger and plate-and-tube heat exchanger seems to be the best performing for the condenser and evaporator respectively. Although shell-and-tube heat exchangers are very efficient, their size prevents them from being used in this application. Capillary tubes proved to be an attractive and cost effective solution. The simple design and easy installation of the scroll compressor make it an attractive option. A suction accumulator mounted between the evaporator and compressor will prevent liquid from entering the compressor. The environmentally friendly refrigerant, R134a has ideal characteristics for the application.

3. FEASIBILITY STUDY

3.1 INTRODUCTION

South Africa is experiencing problems with energy supply and demand, thus the main challenge is to reduce energy consumption by the implementation of energy efficient devices that consumes less energy, while still providing the same service levels. The cost of hot water heating contributes to between 30 % and 50 % of a household's electricity cost.

The hot water consumption per person in middle class homes varies between 50 and 75 l/day at temperatures between 50 °C and 55 °C. During winter months the hot water consumption can increase by up to 36 %. A study done by the National Building Research Institute showed that the residential sector uses approximately 15 % of the total electrical energy that is generated in South Africa. Thus, electrical energy used to heat water for homes contributes to 7% of the total electrical energy consumption (Meyer & Greyvenstein, 1992, pp. 41-42).

3.2 SOLAR WATER HEATING AND HEAT PUMPS

Electricity has become very expensive and Eskom has focused especially on solar water heating in the residential sector. Unfortunately, the capital cost of solar systems is very high, thus the resulting payback periods tend to be more than the life expectancy of the solar system.

Up to now, heat pumps have been implemented successfully mainly in commercial buildings such as hotels, hospitals, university residences, etc. The only electrical energy used in heat pumps, is that which is used to drive the compressor, the pump to circulate the water through the condenser and fan power to cycle air through the evaporator. The cycle usually consumes 1 unit of electrical energy for every 3 units of heating produced. Two thirds of the electrical energy consumption can thus be saved, compared to conventional electrical resistance heating. This will lead to a 20-33 % cost saving since water heating with conventional geysers contributes 30-50 % of the household costs.

A scientific investigation done by the North West University compared conventional electrical resistance heaters, heat pumps and solar water heaters for residential building sectors (North West University, 2012). The article showed that heat pumps are a better alternative compared to solar water heaters in domestic applications. The lower installation cost results in a shorter payback period which is estimated to be between 2.3 and 3.7 years for homes with 3 to 5 residents.

3.3 DOMESTIC HEAT PUMP BENEFITS

The main advantages for domestic hot water heat pumps are:

- Up to 70 % savings on electricity usage
- Low noise emissions
- Simple installations
- Only ambient air is used, therefore no contaminating material, for example coal, is being discharged and no air pollution is caused
- Suitable for all weather conditions

Another advantage is Eskom's heat pump rebate program. Heat pumps can be bought at rebated cost from accredited, published registered suppliers; therefore it is not necessary to apply for a rebate personally. The rebates apply when retrofitting or replacing existing electrical element geysers. The rebates are categorized as follow (Eskom, 2010):

TABLE 3.1: ESKOM REBATES

Heat Pump Tank Size	Rebate
301 – 500 liters	R4 320
100 – 300 liters	R3 668

The following table contains specifications and prices of three heat pumps supplied by AIRCO (Pty) Ltd:

TABLE 3.2: AIRCO HEAT PUMP PRICES AND SPECIFICATIONS

System name	Tank size	Input/ output power	Unit price excl vat	Average installation cost	Total cost excl vat	Eskom rebate	Customer purchase price
ARSJF-32/CN3-A	100L - 300L	1.25/3.2 kW	R10 485	R3 000	R13 485	R3 668	R9 817
ARSJF-35/CN1	100L - 300L	1.01/3.5 kW	R10 485	R3 000	R13485	R3 668	R9 817
ARSJF-50/CN1A	301L - 500L	1.23/5.0 kW	R11 635	R3 000	R14 635	R4 320	R10 315

According to a study done by Eskom in 2011, the payback period for a heat pump system of R15 000 and kWh cost of R0.9/kWh is between 2 to 3 years, if the rebate of R3 668 is included. This however, serves only as a guideline since the payback period can be influenced by various factors, including hot water usage, tariff structures and system cost. The following table obtained from Eskom summarises the approximate annual savings of an average household. (For this study it was assumed that water heating contributes to 40 % of the total electricity cost and that a heat pump can save 67% of the water heating costs.):

TABLE 3.3; APPROXIMATE ANNUAL SAVINGS OF AN AVERAGE HOUSEHOLD

	Electricity cost per month	**Water heating cost**	**Heat pump savings**	**Estimated savings per year**	**Energy saving per month [kWh]**	**Energy saving per year [kWh]**
Year 1 (Assume electricity tariff of R0.9/kWh)	R1 200	R480	R322	R3 859	357	4 288
Year 2 (Assume 24.8% price increase)	R1 498	R599	R401	R4 816	357	4 288
Year 3 (Assume 25.8% price increase)	R1 884	R754	R505	R6 059	357	4 288

A further advantage of heat pumps is the environmental benefits. The following environmental savings can be obtained from a 150 litre heat pump: (Eskom, 2011)

TABLE 3.4: ENVIRONMENTAL BENEFITS

Item	**Factors per kWh**	**kWh/annum**	**Total/year**
Water saved	1.35 litres	4 288	5 789 litres
Coal saved	0.55 kg	4 288	2 358 kg
Ash reduced	157 g	4 288	673.2 kg
CO_2	0.99 kg	4 288	4245 kg

Meyer and Greyvenstein (1991, p. 1042) investigated the influence of price changes on the viability of heat pumps for heating water in South African homes, as well as the payback periods for these pumps. Although both studies were done in the early 1990's, the results still serve as a good guideline by which to measure the feasibility of heat pumps in the residential sector. The results from the investigation on the payback periods showed that the payback period varies from 10.7 for a household of 2 people to 4.2 years for one of 7 people.

The results obtained from the study to investigate the influence of price changes on the viability of heat pumps in the residential sector were similar to those in the previously mentioned study. The benefit of using a heat pump increases with the number of people in the household and the minimum for a positive net present value ranged between 5 and 7 people. When price changes were brought into consideration, the minimum number of people required was determined to be between 5 and 6 people. Since a significant number of households in South Africa are this size, it can be concluded that domestic heat pumps are still an option (Meyer & Greyvenstein, 1992, pp. 47-48).

3.4 CONCLUSION

Conventional electric element geysers consume a large amount of energy and due to the high cost of electricity, alternate, efficient and cost-effective methods need to be investigated. The capital cost of a solar system is high and the payback period long, therefore heat pumps have been investigated.

Heat pumps can save approximately 67 % of the water heating costs and this leads to significant savings. Eskom also offers rebates on the purchase of heat pumps, which will reduce the payback period even more. The environmental benefits of heat pumps are impressive since large amounts of water and coal can be saved each year.

It is clear that domestic heat pumps can be considered as a feasible solution for the energy supply problem and high electricity costs in South Africa. The initial cost of the heat pump will still be high, thus it must be designed to operate as efficiently as possible in order to minimize the operating cost and thereby reduce the payback period.

4.1. INTRODUCTION

A heat pump is based on a vapour compression refrigeration cycle that uses the heat generated in the cycle to heat water. An evaporator is used to extract energy from the ambient air by making use of a refrigerant at low temperature and pressure as the working fluid inside the tubes. An electrically driven compressor compresses the refrigerant to a high pressure and temperature which is then circulated to the tube-in-tube heat exchanger (condenser) via a circulating pump. The energy is exchanged with water, which is at a lower temperature; therefore the water is heated to a temperature of approximately 55 °C. An expansion valve expands the refrigerant back to a lower pressure before it enters the evaporator. Ambient air is forced through the evaporator via an axial fan. Afterwards, the refrigerant enters the compressor again to repeat the cycle.

The layout of the system is demonstrated in the figure below:

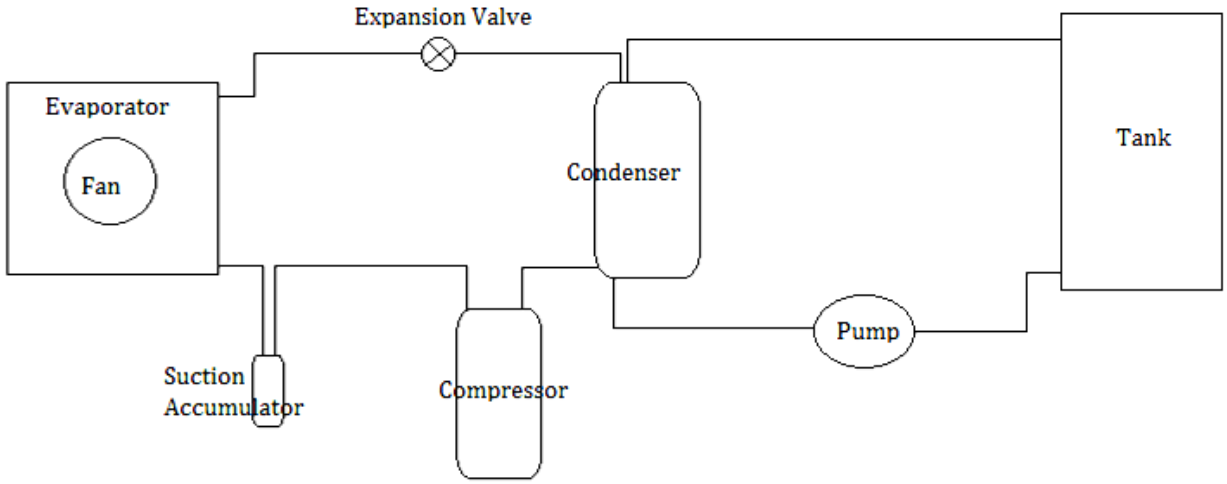

FIGURE 4.1: SYSTEM LAYOUT

The aim of a functional analysis is to make the designer aware of the functions which the design needs to perform. The functions of the four main components will be discussed briefly.

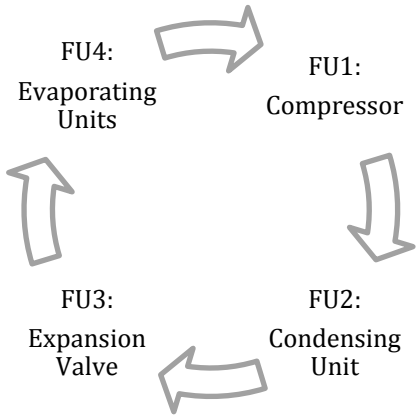

FIGURE 4.2: FUNCTIONAL ANALYSIS

4.2. FUNCTIONAL UNIT 1: COMPRESSOR

The compressor is one of the most important parts of a heat pump, because it compresses the refrigerant to very high pressures while increasing the temperature as well. It also uses the maximum amount of energy in the heat pump, since external work is needed in the form of electric power to deliver the required heating effect. A scroll compressor will be used since it is efficient, quiet and reliable. The refrigerant enters the compressor at a low temperature and pressure and exits at a high temperature and pressure.

In order to ensure that there is no liquid refrigerant in the compressor, suction accumulators are installed close to the compressor in the suction line. This is compulsory to ensure that no liquid will be compressed because this can damage the compressor.

4.3. FUNCTIONAL UNIT 2: CONDENSING UNIT

A tube-in-tube heat exchanger will be used as the condenser in the heat pump to heat the water. Heat is transferred from the refrigerant to the water in the condenser. Thus, the temperature of the refrigerant decreases while the pressure remains fairly constant and it undergoes a phase change from vapour to liquid.

While the refrigerant is flowing in the inner tube, water will be flowing through the outer tube. A circulating centrifugal pump will be used to pump the cold water through the condenser and then the hot water back to the tank.

4.4. FUNCTIONAL UNIT 3: EXPANSION VALVE

The expansion valve controls the amount of refrigerant that enters the evaporator. If the expansion valve functions incorrectly and the amount of refrigerant the evaporator can evaporate is exceeded, liquid refrigerant can enter the compressor and destroy the device. Capillary tubes will be used as the expansion valve in this design, due to their simplicity and low cost.

4.5. FUNCTIONAL UNIT 4: EVAPORATING UNIT

The temperature of the refrigerant is significantly lower than the temperature of the ambient air when it enters the evaporator. The main function of the evaporator is to absorb the heat from the air flowing through it. This causes the temperature of the refrigerant to increase while its pressure remains fairly constant. Another benefit is that dehumidification takes place because the refrigerant is converted to a gas before it enters the compressor again. An axial fan will be used to force the air over the evaporator.

4.6. CONCLUSION

The various functional units interface with each other as shown in figure 4.1. All of the functional units are critical to the successful operation of the system.

5. DESIGN REQUIREMENTS

5.1. Introduction

The domestic hot water heat pump design is based on the design requirements. These requirements contain the user specifications, as well as additional requirements identified by the designer. These requirements will also be used as the criteria to evaluate the different concepts in chapter 6.

5.2. DESIGN REQUIREMENTS

The necessary design requirements for this design are tabulated below. Their importance have been rated from 1 being less important to 5 being very important

TABLE 5.1: DESIGN REQUIREMENTS

	Design Requirement	Importance	Specification
1	Size	4	Suitable for domestic installation (< 1 m x 1m x 0.5 m)
2	Weight	3	<70 kg
2	Cost	5	
3	Manufacturability	3	
4	Maintainability	1	Components replaceable
5	Efficiency	5	>60%
6	Refrigerant type	2	Environmentally friendly
7	Heating capacity	4	>3 kW
8	Heated water temperature	5	>55°C
9	Ease of operation	3	
10	Noise levels	2	<50dB

5.2.1. SIZE

The heat pump should be small enough to be installed in a roof or next to a house. Thus, it should preferably be smaller than 1 m x 1m x 0.5 m.

5.2.2. WEIGHT

The heat pump will be installed against the wall at the outside of the house, therefore it is important to minimise the weight of the heat pump. When selecting the compressor, pump and fan, the overall weight of the system should be kept in mind. If the condenser and evaporator are also designed as compact and small as possible, no additional effort will be required to reduce the weight. The overall weight of the heat pump should be approximately 60 kg.

5.2.3. COST

The cost of the unit should be minimised in order for it to be a competitive product. The compressor, expansion valve, pump, fan and suction accumulator will be scientifically selected and bought, thus, the condenser and evaporator should be designed efficiently. The initial cost of the heat pump will be high, thus the cost effectiveness of the product will be improved by efficient operating.

5.2.4. MANUFACTURABILITY

The manufacturing methods will depend on the type of heat exchangers used for the condenser and evaporator. It is, however, important that the manufacturing is accurate and repeatable, while being cost effective as well.

5.2.5. MAINTAINABILITY

It is important to ensure that the components can be maintained and replaced, thus it should be easily accessible. By reducing the number of components in the system, the risk of failure is also reduced and less maintenance will therefore be required.

5.2.6. EFFICIENCY

Efficiency is extremely important since this will reduce the operating cost. The overall efficiency of the heat pump depends on the efficiency of the compressor, condenser and evaporator, as well as the refrigerant used as the working fluid. This should be more than 67%, therefore the COP should be at least three.

5.2.7. REFRIGERANT TYPE

An environmentally friendly refrigerant should be used in the heat pump. This, however, is not the only selection criteria for the refrigerant. Thermal factors such as operating pressures in compressor and evaporator, specific volume, specific heat and heat of vaporization, should be considered, as well, in order to improve the efficiency of the system.

5.2.8. HEATING CAPACITY

The heating capacity of the heat pump should be at least 3kW.

5.2.9. HEATED WATER TEMPERATURE

The heat pump should be able to heat the water to a temperature of 55 °C, since this temperature is commonly required for domestic applications.

5.2.10. EASE OF OPERATION

Hot water heat pumps should be designed for domestic use; therefore they will be operated by people who are not necessarily skilled in operating heat pumps. The design should be user friendly and easy to operate for the general public.

5.2.11. NOISE LEVELS

Noise levels should be kept to a minimum since this product will be installed on roofs or next to houses and will be operating continuously. It should be preferably less than 55 dB. This should especially be kept in mind when designing the casing, since the vibrations in the casing can lead to undesirable noise levels.

5.3. CONCLUSION

The design requirements have been identified and listed. The table shows these requirements, as well as their measurable values (if applicable). The final design will be evaluated accordingly.

6. CONCEPT GENERATION AND EVALUATION

6.1. INTRODUCTION

This chapter includes one of the most important phases of the design process. In order to design the best possible hot water heat pump, various configurations of the components have to be considered and evaluated according to the user requirements. Once the best concept has been identified, the design process can begin.

6.2. CONCEPT GENERATION

The condenser and evaporator of the domestic hot water heat pump need to be designed, while the compressor, water pump, expansion valve and fan will be scientifically selected from suppliers. Thus, possible configurations of the compressor and evaporator only, will be investigated and evaluated.

The layout of the different components inside the heat pump has a significant influence on the overall-all size. Concepts for the layout of the components will therefore also be investigated and evaluated.

6.2.1. CONDENSER

Although various types of heat exchangers exist, tube-in-tube and shell-in-tube heat exchangers will be considered for the condenser. The main reasons for selecting these types are the large pressure drop and the phase change that occurs in the condenser. These heat exchangers are also suitable for gas-to-liquid applications. This is important, since water will flow in the outer-tube or shell, while the refrigerant will enter the inner tube in a gaseous form, and will exit the condenser as a liquid.

Two flow orientations, namely parallel- and counter-flow have been considered. Based on results obtained from various previous research and experimental studies, counter-flow orientation is more efficient for heat transfer. This is mainly because the log mean temperature difference of counter-flow heat exchangers will always be greater compared to parallel-flow heat exchangers. A smaller surface area and also smaller heat exchanger will then be needed to achieve the desired heat transfer rate in the counter-flow heat exchanger. (Cengel, 2006, p. 624) However, for condensers and boilers, both flow orientations will yield the same result. A counter-flow orientation will still be considered in all the condenser concepts.

The pressure in the condenser is high, thus cylindrical heat exchangers will be considered instead of cubic heat exchangers. Cubic heat exchangers, for example plate heat exchangers, are suitable for low and medium pressure applications. Cylindrical heat exchangers, for example tubular heat exchangers, are suitable for high pressure applications.

6.2.1.1. CONCEPT 1: HELICAL TUBULAR HEAT EXCHANGER

This heat exchanger contains two tubes which are helically coiled. The refrigerant will flow in the inner tube, while water flows through the outer tube. The curvature of this heat exchanger produces a secondary flow field with a circulatory motion in the tube, with the pushing of fluid particles to the core region of the tube, thereby increasing the heat transfer. It is fairly easy to manufacture and a good option when space is limited.

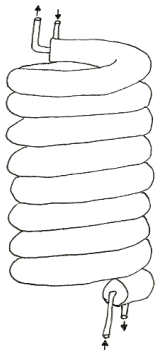

FIGURE 6.1: CONDENSER CONCEPT 1

6.2.1.2. CONCEPT 2: MULTI-TUBULAT HEAT EXCHANGER

The outer tube of this heat exchanger will contain multiple inner tubes through which the refrigerant will flow, while water will flow through the outer tube. The inner pipes will be surrounded by water, thereby improving heat transfer due to the significantly larger heat transfer area. The manufacturing of this heat exchanger is, however, complex, since it requires a lot of welding. The cost will be higher because more material is needed for manufacturing. The size will also be larger compared to a coiled tubular heat exchanger since it contains multiple inner tubes inside the outer tube. This heat exchanger will probably be very efficient in industrial applications, since the applications will be able to justify the size and cost of the heat exchanger.

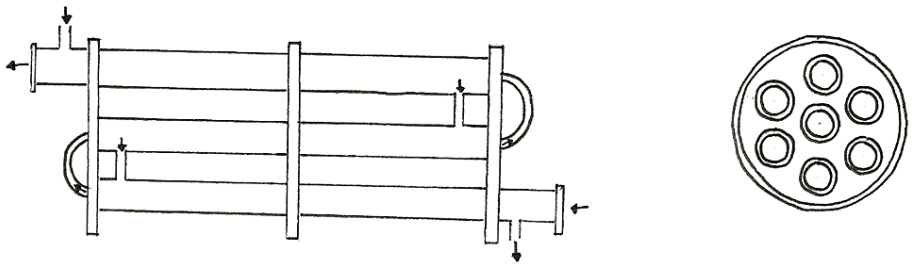

FIGURE 6.2: CONDENSER CONCEPT 2

6.2.1.3. CONCEPT 3: ANNULAR SPACE HEAT EXCHANGER

This heat exchanger contains three concentric tubes. The refrigerant will flow through the outer and inner annular space, while the water will flow through the annular space between them. Since the temperature difference between the refrigerant and the surroundings will be significantly larger than the temperature between the water and the surroundings, the outer tube should be properly insulated to prevent any heat loss. The inner tube can be corrugated or twisted to increase the heat transfer, while the middle tube can contain extruded fins, if desired. The manufacturing of this heat exchanger will require skill and time due to the welding of the various tubes.

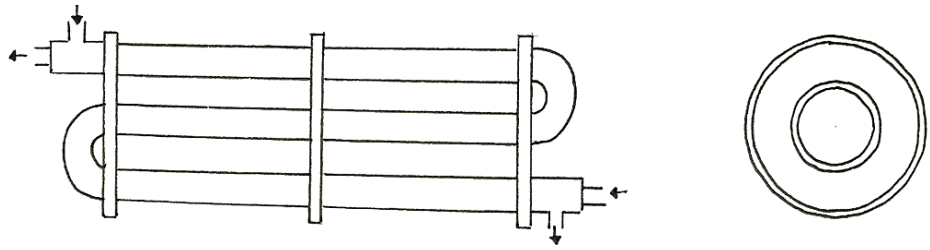

FIGURE 6.3: CONDENSER CONCEPT 3

6.2.1.4. CONCEPT 4: MULTI-PASS HEAT EXCHANGER

This heat exchanger consists of a shell with two (or more) identical tubes on the inside. The refrigerant will flow through the inner tube and will be surrounded by water flowing through the shell. The length of the condenser will be reduced by introducing several U-bends. This will also improve the performance since the two fluids will pass each other several times inside the shell. However, this will increase the height, thus the overall size of the heat exchanger will still be relatively large.

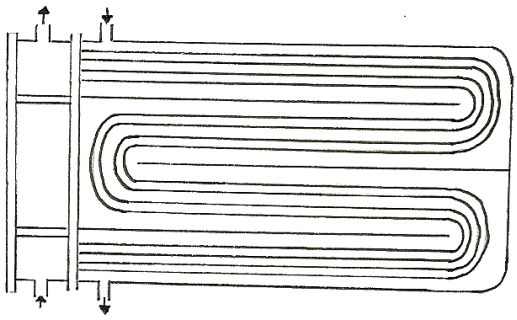

FIGURE 6.4: CONDENSER CONCEPT 4

6.2.2. EVAPORATOR

The refrigerant in the evaporator will be air-cooled. Since the thermal conductivity of air is significantly lower than that of water, the heat transfer area should be increased in order to improve the heat transfer. Fins will therefore be added to the surface areas of the tubes.

Plate-heat exchangers will be considered for the evaporator, since the pressure drop is significantly lower compared to the condenser.

In order to ensure that the detail of the evaporator concepts is clear, only the first row of the evaporator is shown. Thus, the evaporator will contain multiple identical rows in order to ensure sufficient heat transfer.

6.2.2.1. CONCEPT 1:

The refrigerant flows through a copper tube that makes several U-bends in order to reduce the size of the evaporator. The heat transfer area is increased by attaching thin wires across the tubes as shown in the figure. The cost will be low and it is also easy to manufacture.

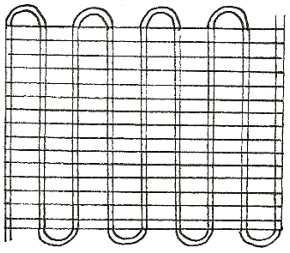

FIGURE 6.5: EVAPORATOR CONCEPT 1

6.2.2.2. CONCEPT 2:

The refrigerant flows through a copper tube that contains circular fins in order to increase the heat transfer. Since these finned tubes can be bought in standard sizes, it will be used for the straight sections, while plain copper tubes of the same diameter will be used for the bends. This heat exchanger is easy to manufacture since it only contains soldering at the bends and the finned tubes are readily available.

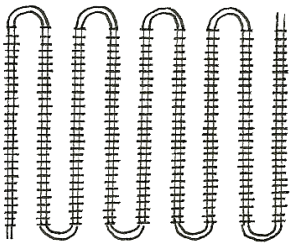

FIGURE 6.6: EVAPORATOR CONCEPT 2

6.2.2.3. CONCEPT 3:

The refrigerant flows through a copper tube that makes several U-bends in order to reduce the size of the evaporator. The tube goes through several closely spaced aluminium sheets in order to increase the heat transfer area. This evaporator will be very efficient and will have a relatively low cost and weight since aluminium fins will be used. The sheets must be pressed on the tubes to ensure good contact between the tube and the fins in order to obtain sufficient heat transfer.

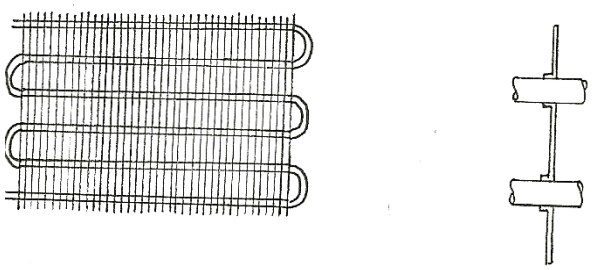

FIGURE 6.7: EVAPORATOR CONCEPT 3

6.2.2.4. CONCEPT 4:

The refrigerant flows through a copper tube that makes several U-bends. In order to reduce the size of the evaporator even more, the tubes are arranged in a staggered arrangement as shown in the figure. Thin copper plates are soldered over the tubes in the

flow direction in order to increase the heat transfer area. The manufacturing will require a lot of soldering since the sheets should be bended over the tubes and be soldered along the length to ensure good contact and air flow.

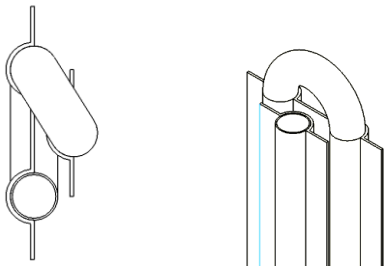

FIGURE 6.8: EVAPORATOR CONCEPT 4

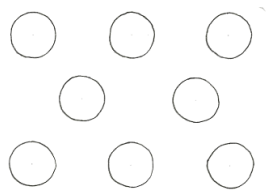

FIGURE 6.9: STAGGERED ARRANGEMENT

6.3. CONCEPT EVALUATION

The best configuration will be selected based on the user requirements and feasibility. The requirements will be allocated a certain weight according to their importance. The concepts will be given a rating from 1, being bad, to 4, being good. This rating will then be multiplied by the weight of the requirement in order to obtain the weighted rating. The concept with the highest weighted total will be regarded as the best concept.

6.3.1. CONDENSER

TABLE 6.1: CONDENSER CONCEPT EVALUATION

Selection Criteria		**Concepts**							
		1		**2**		**3**		**4**	
	Weighting	R	W	R	W	R	W	R	W
Size and Compactness	3	4	12	1	3	3	9	2	6
Weight	1	4	4	1	1	3	3	2	2
Cost	3	4	12	1	3	2	6	3	9
Manufacturability	2	4	8	1	2	2	4	3	6
Maintainability	1	2	2	3	3	4	4	1	1
Efficiency	3	4	12	3	9	2	6	1	3
Weighted Total		**50**		**21**		**32**		**27**	

Key: R = Rating W =Weighted Rating

It is clear that concept 1, which is the helical tubular heat exchanger, will be the best option, since it is efficient, easy to manufacture and has a low cost, while being compact at the same time.

6.3.2. EVAPORATOR

TABLE 6.2: EVAPORATOR CONCEPT EVALUATION

Selection Criteria		Concepts							
		1		2		3		4	
	Weighting	R	W	R	W	R	W	R	W
Size and Compactness	3	1	3	2	6	4	12	3	9
Weight	1	4	4	3	3	2	2	1	1
Cost	3	4	12	1	3	3	9	2	6
Manufacturability	2	4	8	2	4	3	6	1	2
Maintainability	1	3	3	2	2	1	1	4	4
Efficiency	3	1	3	2	6	4	12	3	9
Weighted Total		**33**		**24**		**42**		**31**	

Key: R = Rating W =Weighted Rating

It is clear that concept 3, which is the heat exchanger consisting of copper tubes going through various aluminium plates, will be the best option, since it is efficient, easy to manufacture and is extremely compact. This will ensure that the overall size of the heat pump will be smaller as well.

6.4. LAYOUT OF COMPONENTS

These concepts contain the layout of the components in the heat pump only, thus the water and refrigeration pipes, detail of the heat pump casing, as well as the connection to the water tank are not shown.

6.4.1. CONCEPT 1

Layout is compact and there is much unused space. There is sufficient space for the electrical fittings. However, the distance between the compressor and evaporator is relatively large, which is undesirable.

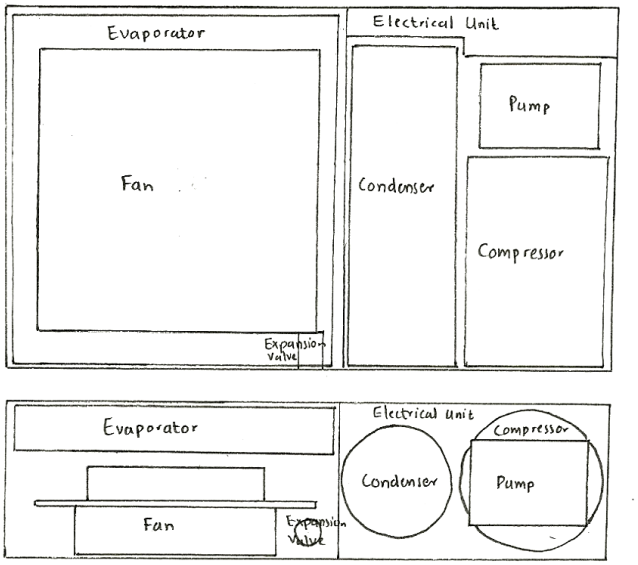

FIGURE 6.10: LAYOUT CONCEPT 1

6.4.2. CONCEPT 2

In this concept, the height of the evaporator is reduced, thus the length is increased. In order to reduce the overall length of the heat pump, the evaporator is curved at the one end. This, however, will increase the complexity of the design and manufacturing of the evaporator. The condenser and compressor are switched in order to decrease the distance between the evaporator and compressor. Unfortunately, there are quite a lot of unused spaces in this layout.

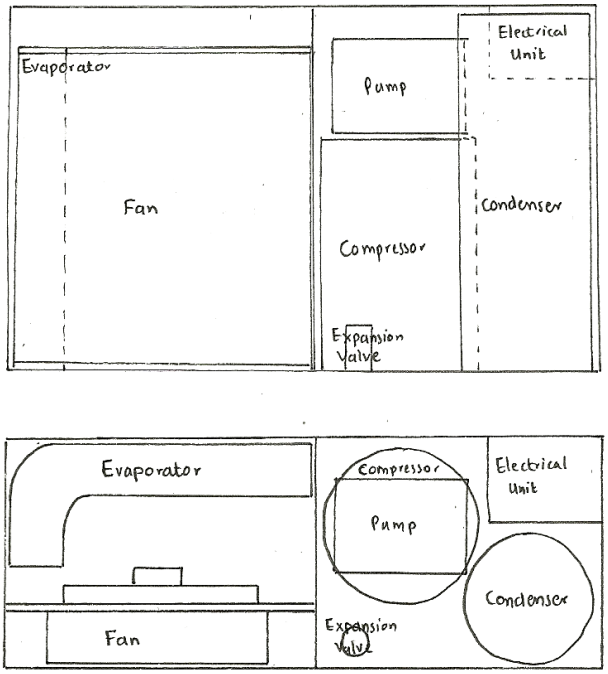

FIGURE 6.11: LAYOUT CONCEPT 2

6.4.3. CONCEPT 3

In this concept, the height of both the evaporator and condenser is increased, so that the length and coil diameter are decreased. The condenser and compressor are switched again in order to decrease the distance between the evaporator and compressor. This layout is simple and very compact with little unused space.

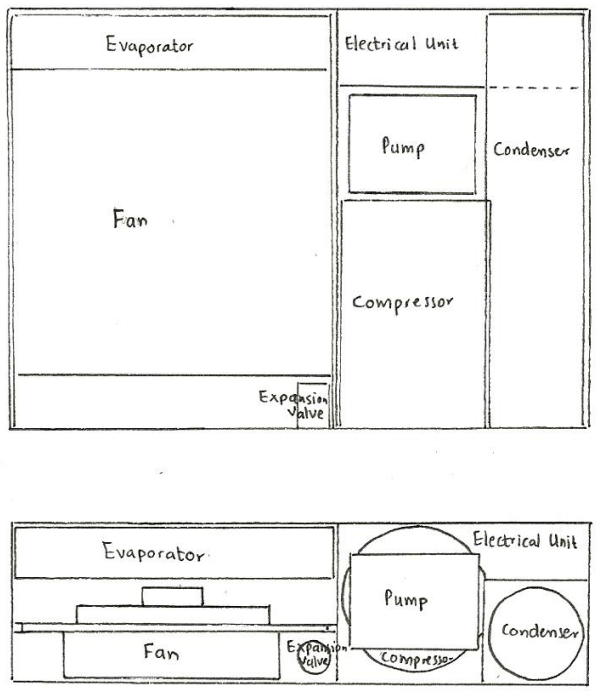

FIGURE 6.12: LAYOUT CONCEPT 3

6.4.4 CONCEPT 4

In this concept, the height and width of the evaporator are similar to that of the fan. The coil diameter of the condenser is increased in order to decrease the height and supply sufficient space for the compressor to fit in the middle. The expansion valve consists of three tubes placed on top of each other. A suction accumulator is also added between the evaporator and compressor.

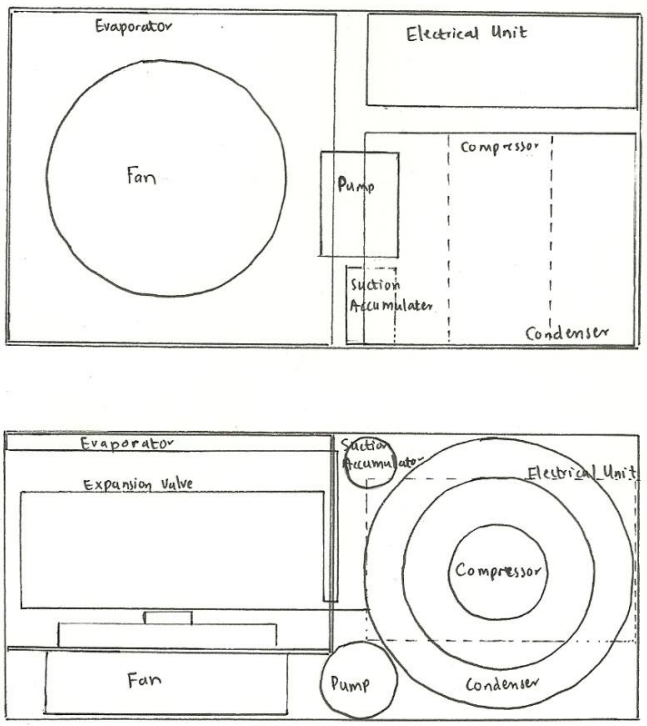

FIGURE 6.13: LAYOUT CONCEPT 4

6.4.5 CONCEPT EVALUATION

The best layout will be selected based on the overall size and compactness. The requirements are given a certain weight according to their importance. The concepts will be given a rating from 1, being bad, to 3, being good. This rating will then be multiplied by the weight of the requirement in order to obtain the weighted rating. The concept with the highest weighted total will be regarded as the best concept.

TABLE 6.3: LAYOUT CONCEPT EVALUATION

Selection Criteria		**Concepts**							
		1		**2**		**3**		**4**	
	Weighting	R	W	R	W	R	W	R	W
Size	3	1	3	4	12	2	6	3	9
Weight	1	2	2	3	3	1	1	4	4
Manufacturability	2	2	4	3	6	1	2	4	8
Use of space	3	2	6	4	12	1	3	3	9
Logic component layout	2	1	2	3	6	2	4	4	8
Weighted Total		**17**		**15**		**33**		**38**	

Key: R = Rating W =Weighted Rating

It is clear that concept 4 will be the best layout to ensure that the heat pump is as small and compact as possible.

6.5 CONCLUSION

Various concepts for the condenser, evaporator, as well as the layout of the components have been generated and evaluated. Concept 1, which is a helically tubular coiled heat exchanger, has been chosen for the condenser. Concept 3, which is the heat exchanger consisting of copper tubes going through various aluminium plates, has been chosen for the evaporator since it is easy to manufacture, efficient and compact. The fourth layout concept has been chosen because it will ensure the minimum overall size of the heat pump.

7. DETAIL DESIGN AND SPECIFICATIONS

7.1 INTRODUCTION

This chapter contains the design calculations, as well as the detail specifications for the four main components of the heat pump. The compressor, pump, expansion valve, fan and suction accumulator will not be designed in detail, but will be selected scientifically. The condenser and evaporator will be designed in detail from first principles.

7.2 ASSUMPTIONS

Since this is only a first order design, the design calculations have been significantly simplified. The assumptions that were made are mentioned at the relative calculations. Thus, before finalizing the final design and manufacturing, it is strongly advised that the design criteria and calculations be refined.

7.3 THERMODYNAMIC CYCLE

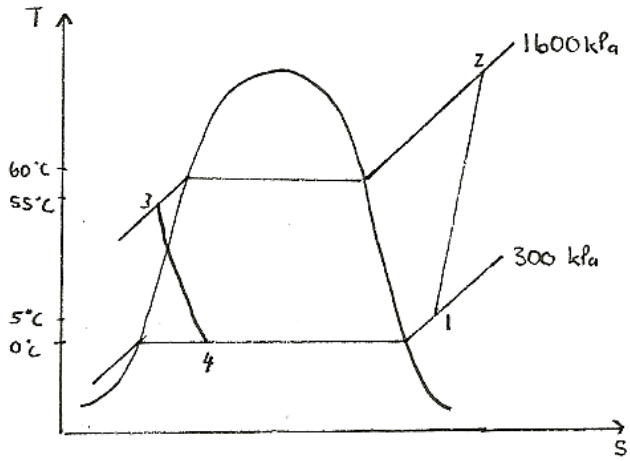

FIGURE 7.1: THERMODYNAMIC CYCLE

<u>Point 1</u>:
T = 5 °C P = 300 kPa
From Table B5.2: h_1 = 402.68 kJ/kg

<u>Point 2</u>:
From equation 2.3:

$$\dot{W} = \dot{m}(h_2 - h_1)$$

$$1.41 = 0.0205(h_2 - 402.68)$$

$$h_2 = 471.46 \text{ kJ/kg}$$

Via interpolation in Table B5.2: T_2 = 95.64 °C
<u>Point 3</u>:

For a mass flux (G) of 300 kg/m^{2}s the pressure drop in the condenser will be 1.5 kPa which can be regarded as negligible on the T-s diagram.
T = 55 °C P = 1600 kPa
From Table B5.1: h_3 = 279.72 kJ/kg s_3 = 1.2619 kJ/kg.K
From equation 2.1:
$\dot{Q}_h = \dot{m}(h_2 - h_3)$
= 0.0205(471.46 – 279.72)
= 3.93 kW > 3 kW (acceptable)

<u>Point 4</u>:
$h_4 = h_3$ = 279.72 kJ/kg T = 0 °C P = 300 kPa
From Table B5.1: h_f = 200 kJ/kg h_{fg} = 200 kJ/kg

$$h_4 = h_f + x*h_{fg} \quad (7.1)$$

279.72 = 200 + x*198.36
x = 0.3999 ≈ 40%
From equation 2.2:
$\dot{Q}_L = \dot{m}(h_1 - h_4)$
= 0.0205(402.68 – 279.72)
= 2.52 kW

7.4 COMPRESSOR

The compressor selection is based on the following requirements:

- Compressor Type: Scroll
- Application Type: Heat pump
- Refrigerant: R134a
- Frequency: 50 Hz

A ZH15K4E-TFD Copeland Scroll Compressor with the following specifications was selected from Emerson Climate Technologies:

- Capacity: 2.49 kW
- Power: 1.41 kW
- Current: 2.7 A
- Mass flow: 0.0205 kg/s
- COP: 1.8
- Isentropic efficiency: 54.4 %
- Condensing Temperature: 60 °C
- Evaporating Temperature: 0 °C
- Mass: 25.85 kg
- Overall Height: 363.7 mm
- Overall Diameter: 241.3 mm

7.5 CONDENSER

A helically coiled tube-in-tube heat exchanger will be used for the condenser. The curvature of this heat exchanger produces a secondary flow field with a circulatory motion in the tube, with the pushing of fluid particles to the core region of the tube. The heat transfer in these heat exchangers can therefore be between 2 and 3 times higher compared to straight tubes. However, for the design calculations, the condenser will be regarded as a straight tube-in-tube heat exchanger and the flow will be regarded as flow through an annulus. This is a very conservative approach and heat losses to the surroundings have been neglected, since the heat transfer in the actual coiled condenser will be higher than the values obtained from the calculations due to the curvatures.

From the Thermodynamic Cycle:

From equation 2.1:

$\dot{Q}_h = \dot{m}(h_2 - h_3)$

$= 0.0205(471.46 - 279.72)$

$= 3.93$ kW

The mass flux can be used to determine the diameter of the inner tube:

$$G = \frac{\dot{m}}{A} \tag{7.2}$$

$$300 = \frac{0.0205}{A}$$

$$A = 6.8333\text{x}10^{-5}\ \text{m}^2$$

$$A = \frac{\pi}{4} d^2 \tag{7.3}$$

$$6.8333\text{x}10^{-5} = \frac{\pi}{4} d^2$$

$$d = 0.00933$$

Due to availability, light-half hard copper tubes with an inside and outside diameter of 10.8 mm and 12 mm will be used. These half hard tubes have excellent bending qualities. (Copper Tubing Africa, 2012)

The log-mean temperature difference can be determined as follows:

$$\Delta T_{lm} = \frac{\Delta T_1 - \Delta T_2}{\ln\left(\frac{\Delta T_1}{\Delta T_2}\right)} \tag{7.4}$$

$$= \frac{(60-20)-(60-55)}{\ln\left(\frac{60-20}{60-55}\right)}$$

$$= 16.83\ °\text{C}$$

The bulk temperature is the arithmetic temperature difference, thus:

$$T_b = \frac{T_i + T_e}{2} \tag{7.5}$$

$$= \frac{20+55}{2}$$

$$= 37.5\ °\text{C}$$

From Table A-9: k = 0.627 W/m.K at 37.5 °C

The heat transfer coefficient of R134a, with a vapour quality of 0.5 and mass flux of 300 kg/m²s, is 2200 W/m²K. (Suliman, et al., 2009, p. 5705)

The flow through the condenser can be regarded as flow through an annulus, thus the following equation can be used to determine the Nusselt number:

$$\text{Nu} = \frac{hd_h}{k} \tag{7.6}$$

with $d_h = d_o - d_i$ (7.7)

The wall thickness of the copper tubes is very small (0.5 mm) and the thermal conductivity of copper is high, therefore the resistance of tube wall can be neglected when determining the overall heat transfer coefficient.

$$U = \frac{1}{\frac{1}{h_i}+\frac{1}{h_o}} = \frac{1}{\frac{1}{h_i}+\frac{d_o - d_i}{Nu\,k}} \tag{7.8}$$

The length of the heat exchanger can be determined using the following equation:

$$Q = hA\Delta T_{lm} \tag{7.9}$$

By substituting equations 7.6, 7.7 and 7.8 in the above equation, an equation for the length of the condenser can be obtained:

$$Q = \frac{1}{\frac{1}{h_i}+\frac{d_o - d_i}{Nu\,k}} (\pi d_i L)\Delta T_{lm}$$

$$Q = \frac{\pi d_i\,\Delta T_{lm}}{\frac{1}{h_i}+\frac{d_o - d_i}{Nu\,k}} L$$

$$L = \frac{\frac{1}{h_i}+\frac{d_o - d_i}{Nu\,k}}{\pi d_i\,\Delta T_{lm}} Q \tag{7.10}$$

This formula was used in a Matlab code (see Appendix A) to determine the length of the heat exchanger for different diameters of the outer tube.

A 3D plot was initially created to show the length of the heat exchanger for different inner and outer tube diameters.

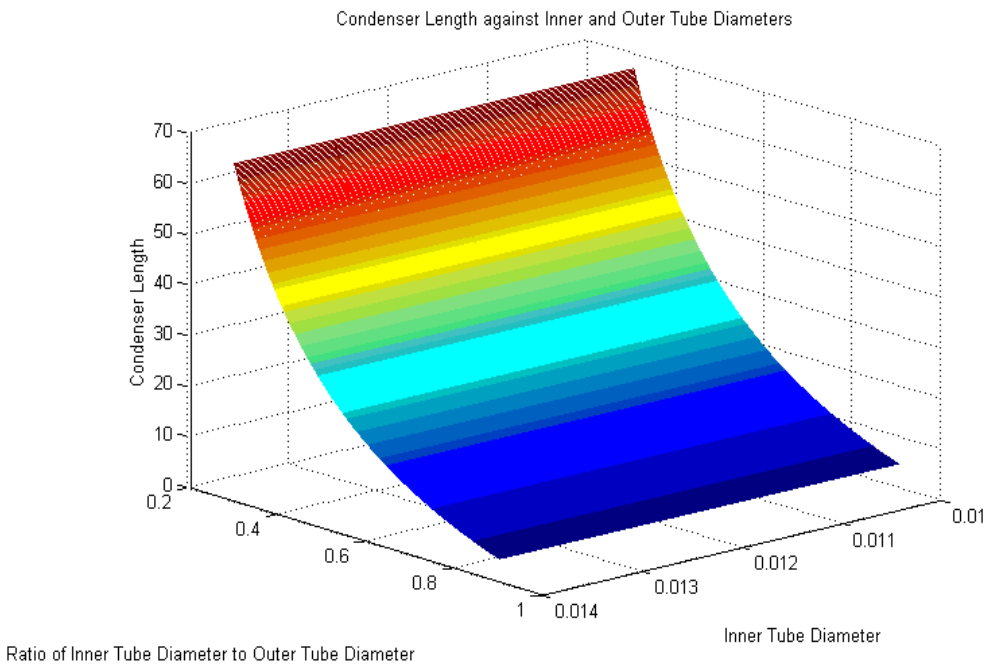

FIGURE 7.2: PLOT OF CONDENSER LENGTH AGAINST INNER AND OUTER TUBE DIAMETERS

From this graph it is clear that the effect of the inner tube diameter on the length of the condenser is negligible compared to the diameter of the outer tube. The length of the condenser increases drastically as the outer tube diameter increases. Thus, by decreasing the annular space between the two tubes, the length and size of the condenser can be decreased as well.

The outer tube diameter of the inner tube is 12 mm, thus a second graph was plotted to show the condenser length for an outer tube diameter of 12 mm for the inner tube and different inner tube diameters for the outer tube.

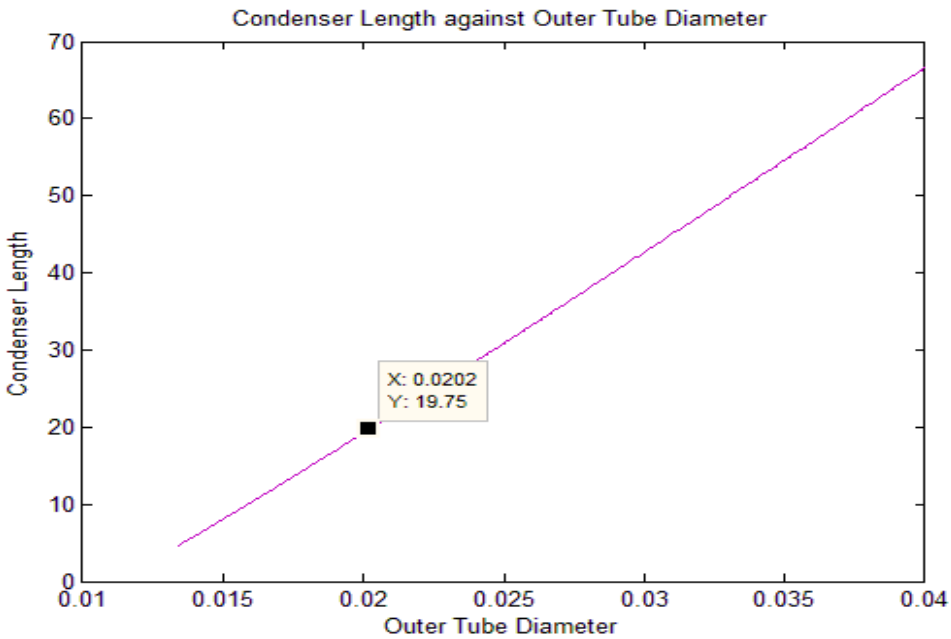

FIGURE 7.3: PLOT OF CONDENSER LENGTH AGAINST OUTER TUBE DIAMETER

From the graph, the overall tube length will be 19.75 m if the inside diameter of the outer tube is 0.0202 m. Thus, a medium half hard copper pipe with an inside and outside diameter of 20.2 mm and 22 mm will be used, primarily due to its excellent bending capabilities.

In order to obtain coil diameter and suitable height for the condenser, a plot was generated to show the number of turns against the coil diameter. The coil diameter varied between 0.05 m and 0.2 m.

$$N = \frac{L}{\pi * d_c} \tag{7.11}$$

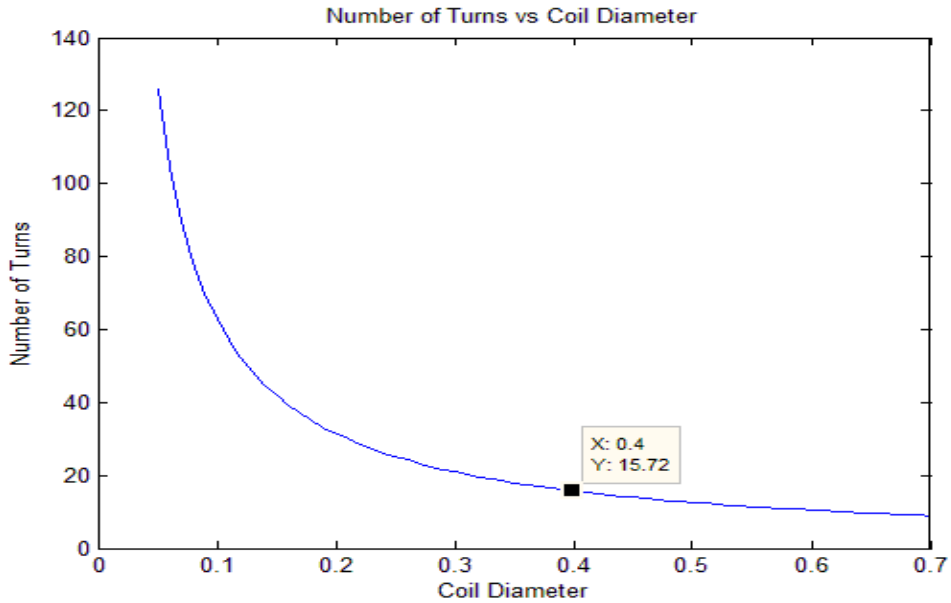

FIGURE 7.4: PLOT OF TURNS AGAINST COIL DIAMETER

From this graph it can be seen that a coil diameter of 0.4 m will yield 15.72 turns. The overall height of the condenser can then be determined as follow:

$$H = d_o * N \tag{7.12}$$
$$= 0.022*15.7$$
$$\approx 0.345 \text{ m}$$

Since the hot refrigerant flows in the inside tube and the water that enters at room temperature flows in the outer tube, the heat loss to the surroundings is minimized. However, to improve the efficiency of the heat exchanger, 12.5 mm thick Armaflex insulation will be wrapped around the condenser coil. The insulation will be wrapped around the coil instead of around the tube to reduce the size of the condenser. In order to reduce the overall size of the heat pump, the compressor will be placed inside the condenser coil. So, to prevent any heat transfer from the condenser to the compressor, two 12.5 mm thick insulation sheets will be wrapped round the condenser at the inside.

To determine the heat loss from the condenser, it can be assumed that the convection heat transfer coefficient to the air is 2W/m^{2}K. The thermal conductivity of the insulation is 0.034 W/mK and the surface temperature of the condenser and the temperature of the air are assumed to be 55 °C and 10 °C respectively. Therefore, worst case conditions are considered. The heat loss from the condenser to the outside can be determined as follows:

$$R = \frac{1}{h_i A_i} + \frac{ln\left(\frac{r_2}{r_1}\right)}{2\pi kL} \quad (7.13)$$

$$= \frac{1}{2*\pi*0.442*0.345} + \frac{ln\left(\frac{0.422}{0.328}\right)}{2\pi*0.034*0.345}$$

= 2.538 W/°C

$$\dot{Q} = \frac{T_s - T_o}{R} \quad (7.14)$$

$$= \frac{55-10}{2.538}$$

= 17.73 W

Since the total heat that is transferred from the refrigerant to the water is 3.93 kW, only 0.45% of the heat is lost through the insulation, which is acceptable. However, two of these sheets will still be used on the inside of the condenser, since this will not only prevent heat loss, but also protect the condenser when minor or maintenance needs to be done on the compressor. Therefore the condenser needs not to be removed every time.

The water tubes from the heat pump inlet to the condenser will be 22 mm insulated copper tubes, while the tubes from the condenser to the heat pump outlet should be insulated in order to prevent heat loss from the hot water. Since the same conditions as for the condenser holds for these pipes, 10 mm thick insulation will be sufficient.

Thus, the outer and inner diameter of the insulated condenser will be 442 mm and 328 mm respectively and the height will be 345 mm.

The theoretical mass of the tubes is as follows:

- Inner tube: 0.191 kg/m
- Outer tube: 0.532 kg/m

Thus the total mass of the condenser will be:

$$M = 19.75 * (0.191 + 0.532)$$
$$= 14.3 \text{ kg}$$

7.6 EXPANSION VALVE

A capillary tube will be used as an expansion valve for this heat pump, since it provides adequate control at a much lower price compared to expansion valves. The tables and method provided in the ASHRAE Handbook will be used. (Anon., 2010)

The following data were needed to size the expansion valve:

- Inlet (condenser) pressure: 1.6 MPa
- Inlet (condenser) sub cooling: 5 °C
- Mass flow rate: 73.8 kg/h

For a capillary tube with an inner diameter of 0.86mm and length of 3.3 m the mass flow rate will be 6.6 kg/h. Since the mass flow rate through the system is 73.8 kg/h, 12 capillary tubes will be required.

If the inner diameter is increased to 1.25 mm and the length of the tube is decreased to 1.5 mm, the flow rate correction factor ϕ will be 3.75. The number of these tubes can be calculated as follows:

$$N = \frac{mass\ flow\ rate\ of\ refrigerant}{mass\ flow\ rate\ x\ correction\ factor} \quad (7.15)$$

$$= \frac{73.8}{6.6\ x\ 3.75}$$

$$= 2.98$$

Therefore, three capillary tubes with an inner diameter of 1.25 mm, outer diameter of 2.54 mm and length of 1.5 m will be used.

The theoretical mass of the capillary tube is 0.034 kg/m (Maksal, 2009), thus the overall weight of the capillary tubes will be:

$$M = w * L \quad (7.16)$$
$$= 0.034 * 1.5 * 3$$
$$= 0.153 \text{ kg}$$

7.7 EVAPORATOR

The fins will be made from thin Aluminium sheets, due to its high thermal conductivity, as well as low weight and cost.

From the Thermodynamic Cycle:

The heat extracted from the ambient air can be determined equation 2.2:

$$\dot{Q}_L = \dot{m}(h_1 - h_4)$$
$$= 0.0205(402.68 - 279.72)$$
$$= 2.52 \text{ kW}$$

The diameter of the inner tube is determined to be 9.3 mm using equations 7.2 and 7.3. Therefore, as mentioned earlier, a medium-half hard copper tube with an inside and outside diameter of 10.8 mm and 12 mm will be used. These half hard tubes have excellent bending qualities. (Copper Tubing Africa, 2012)

To determine the heat transfer coefficient, the evaporator was regarded as a large number of very thin sheets. The copper tube with the refrigerant has been neglected. Once again this is a very conservative design, since the extra heat transfer area will increase the performance of the evaporator, thereby neglecting heat losses due to non-ideal conditions.

An air face velocity of 2 m/s will be sufficient without causing undesirable noise levels (lower than 85 dB). At a first guess, it was assumed that the fins have a thickness of 0.5 mm, length of 9 mm and width of twice the tube diameter, thus 24 mm. Properties of air were taken at the inlet temperature which was assumed to be at 20 °C.

From Table A-15: $v = 1.516 \times 10^{-5}$ Pr = 0.7309 k = 0.02514 W/m.K

The heat transfer of the fins was calculated by regarding the fin tips as adiabatic, since only half of the plate between two tubes was regarded as one fin. The heat transfer was therefore calculated using the following equation:

$$\dot{Q} = \sqrt{hpkA_c}(T_b - T_\infty)\tanh\left(L\sqrt{\frac{2h}{kt}}\right) \tag{7.17}$$

By substituting the following equations for the perimeter and cross-sectional area, as well as equations for the Reynolds and Nusselt numbers in order to obtain the heat transfer coefficient, the equation above was simplified as follows:

$$p = w\ x\ t \tag{7.18}$$

$$A_c = 2(w + t) \tag{7.19}$$

$$Re = \frac{VL}{v} \tag{7.20}$$

$$Nu = \frac{hL}{k} = 0.664\ Re^{0.5}\ Pr^{\frac{1}{3}} \tag{7.21}$$

$$h = 0.664\ \frac{VL}{v}^{0.5}\ Pr^{\frac{1}{3}}\frac{k}{L} \tag{7.22}$$

Thus, substituting equations 7.18, 7.19 and 7.22 in equation 7.17, the following equation for the heat transfer from an adiabatic fin can be obtained:

$$\dot{Q} = \left(\left(0.664\ \frac{VL}{v}^{0.5}\ Pr^{\frac{1}{3}}\frac{k}{L}\right)(w\ x\ t)k * 2(w + t)\right)^{0.5} * (T_b - T_\infty) * \tanh\left(L\,2\left(0.664\ \frac{VL}{v}^{0.5}\ Pr^{\frac{1}{3}}\frac{k}{L}\right)/kt\right) \tag{7.23}$$

This equation was used in Matlab codes in order to obtain the width, height and thickness of the plates between the tubes that will yield the maximum amount of heat transfer in the minimum space. The following figure shows the dimensions of the fins:

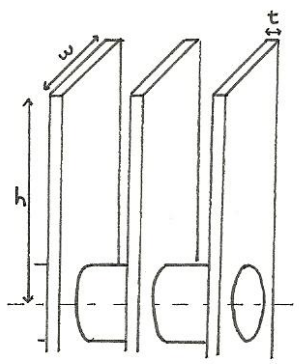

FIGURE 7.5: FIN DIMENSIONS

As a starting point, the length of the fin (being the half distance between two tubes) was chosen as 30 mm and the width of the fin (being the length of the sheets) and thickness of the fins varied between 3 mm and 60 mm, and 0.0003 mm and 0.0012 mm, respectively. A 3D plot was generated to show the influence of the fin thickness and height on the heat transfer from the fins.

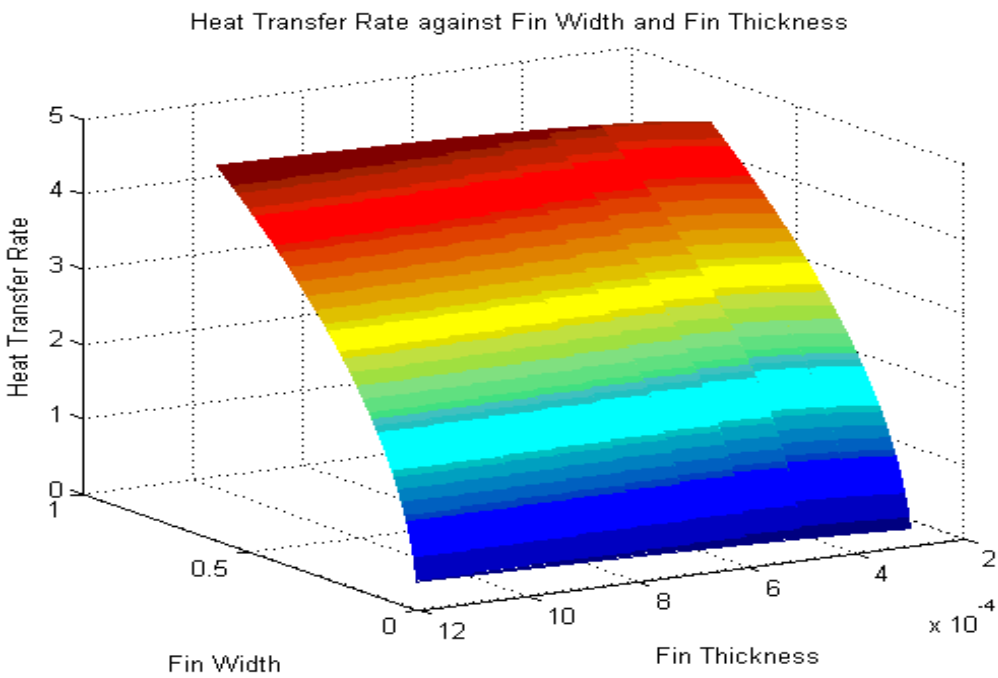

FIGURE 7.6: PLOT OF HEAT TRANSFER RATE AGAINST FIN WIDTH AND FIN THICKNESS

This plot shows that the heat transfer is dependent on the fin thickness and width, therefore thicker and wider aluminium sheets will improve the heat transfer. Fin thicknesses of approximately 0.3 mm and 0.5 mm are recommended. The graph shows that a fin thickness of larger than 0.6 mm will not have a significant impact on the heat transfer rate. Aluminium sheets with a thickness of 0.5 mm will therefore be used and these sheets are also available at manufacturers.

Thus, for the remaining calculations in the Matlab codes, a fin thickness of 0.5 mm was used. Another Matlab code was used to create a 3D plot of the heat transfer rate against the height of the tubes and the width of the fins. The height and width were both chosen to vary between 0.005 and 0.05 m.

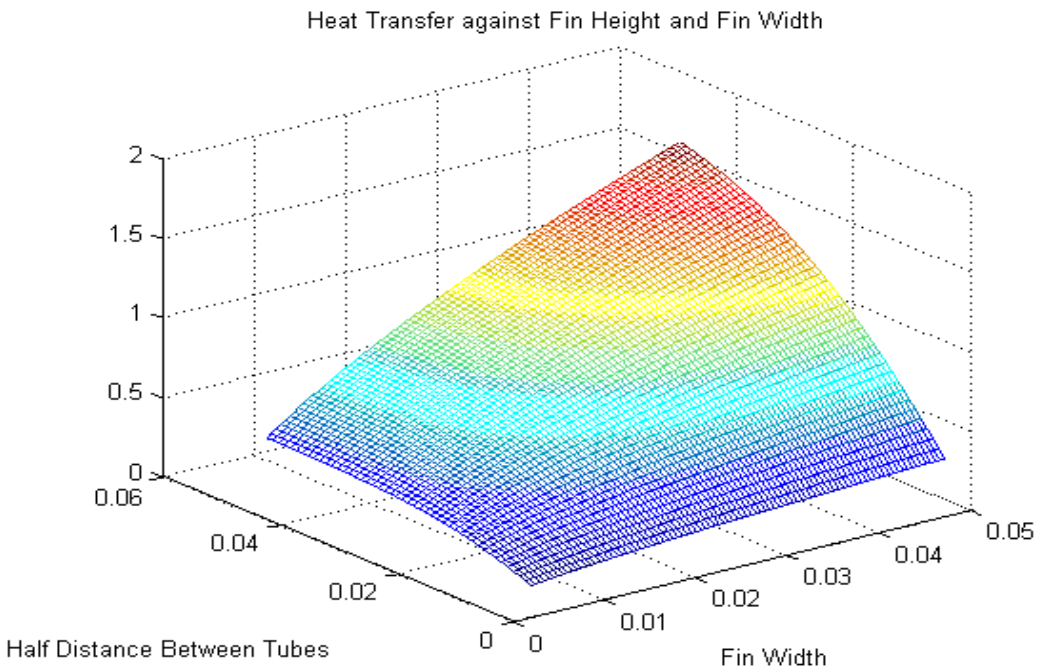

FIGURE 7.7: PLOT OF HEAT TRANSFER AGAINST FIN HEIGHT AND FIN WIDTH

From this graph it follows that there is a significant dependency between the fin widths, and that the heat transfer increases drastically when the fin height is increased up to 35 mm. However this effect becomes less significant after a height of 50 mm. Since the heat transfer increases with an increasing fin width, 50 mm wide aluminium sheets will be used for fins.

The following graph was created to determine the relationship between the heat transfer and the fin height. For these calculations, the width and thickness of the fin were chosen as 50 mm and 0.5 mm, respectively. It is clear that there is a linear relationship between the heat transfer and the fin height. In order to reduce the overall size of the heat pump, a tube height of 65 cm will be used. This also corresponds to the height of the fan which will be discussed in the next section.

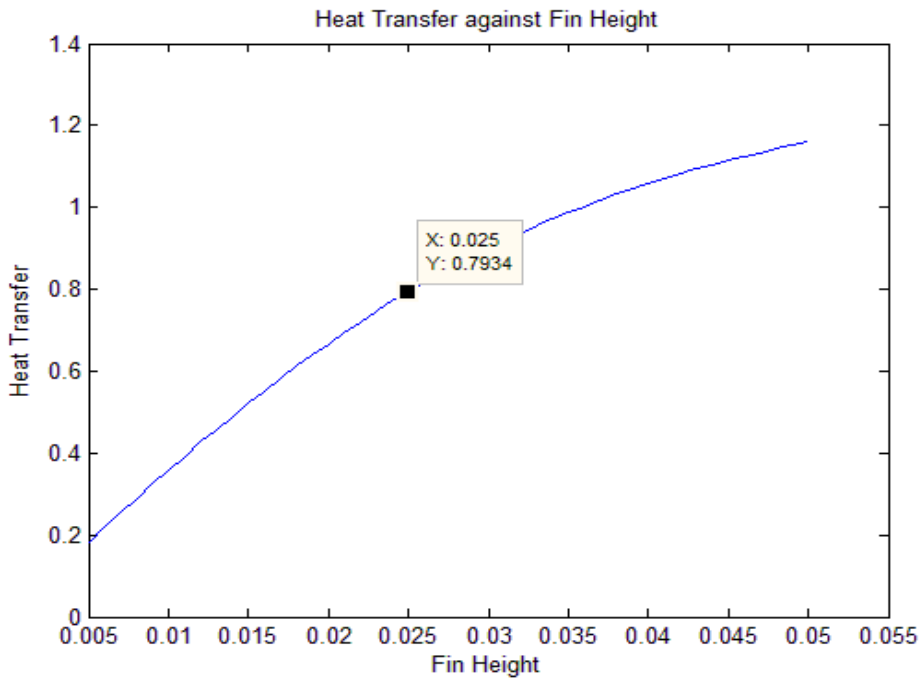

FIGURE 7.8: PLOT OF HEAT TRANSFER AGAINST FIN HEIGHT

From the results above, it follows that the increases in heat transfer decrease when the height of the fins is increased beyond 25 mm. Fins with a height of 25 mm will therefore be used and the center distance between two tubes will be 62 mm. The fins will have a thickness of 0.5 mm and width of 50 mm. The heat transfer from one fin is 0.7934 W and since there is a fin at the top and bottom of the tube, the heat transfer of the tube with two fins will be 1.59 W. Thus, in order to obtain a heat transfer rate of 2.52 kW, 8 rows containing 196 aluminium sheets will be needed. However, 200 sheets will be used to ensure that the evaporator will be efficient. The sheets will be spaced 2 mm apart and the bended copper tubes at the sides will have a bend radius of 31 mm. The overall width and height of the evaporator will therefore be 620 mm and 496 mm, respectively.

Aluminium sheets with a size of 2500 x 1250 x 0.5 mm are available and have a theoretical mass of 4.234 kg/sheet. Since the dimension of one evaporator fin is 620 x 50 mm, 25 evaporator sheets along the length and 5 along the height of the standard sheet can be obtained. Since one standard aluminium sheet yields 125 evaporator fins, 2 aluminium sheets will be used, therefore the mass of the fins can be approximated as being 8.468 kg. The theoretical mass of the copper tubes is 0.25 kg/m, thus the mass and length can be determined as follow:

$L = L_{straight} + L_{bends}$
$= 8 * 0.5 + 7 * \pi * 0.031$
= 4.682 m

M = 4.682 * 0.25
= 1.17 kg

The overall weight of the evaporator will subsequently be 9.638 kg.

7.8 SUCTION ACCUMULATOR

The selection of suction accumulators is based on the following input data:

- Refrigeration Capacity: 2.52 kW
- Evaporating Temperature: 0°C
- Refrigerant Type: R134-a

A 3100-08401A Heldon Suction Accumulator will be suitable for the heat pump. The specifications of this suction accumulator are:

- Connection Size: 12.25 mm
- Trapping Capacity: 0.9 kg
- Maximum Refrigeration Capacity: 3.2 kW
- Outside Diameter: 102 mm
- Overall Height: 168 mm
- Weight: 1.27 kg

7.9 FAN

An axial fan will be used to force the air over the evaporator tubes. The air face velocity of the air should be 2 m/s in order to ensure sufficient air flow without undesirable noise levels.

To select a suitable fan, the total pressure drop across the evaporator needs to be calculated. This can be done by approximating the evaporator as 16 heat sinks (two heat sinks per tube) and calculating the pressure drop over the heat sink. A method described by Simons (2003) will be used.

The ratio of the area of the flow channels to the area of the heat sink and the hydraulic diameter of the space between the fins can be determined as follow:

$$\sigma = 1 - \frac{N_{fin} * t_f}{W} \quad (7.24)$$
$$= 1 - \frac{200*0.0005}{0.498}$$
$$= 0.7992$$

$$d_h = \frac{4A}{p} \quad (7.25)$$
$$= \frac{4*0.002*0.025}{2*(2+25)}$$
$$= 0.0037$$

K_C and K_e represent the pressure losses due to sudden contraction and expansion of the flow through heat sink flow channels and can be determined by:

$$K_C = 0.42\,(1 - \sigma^2) \qquad (7.26)$$
$$= 0.42\,(1 - 0.7992^2)$$
$$= 0.1515$$

$$K_e = (1 - \sigma^2)^2 \qquad (7.26)$$
$$= (1 - 0.7992^2)^2$$

$$= 0.1305$$

The following equations can be used to determine the volumetric air flow rate and average velocity:

$$Q = VA \qquad (7.28)$$
$$= 2 * 0.498 * 0.025$$
$$= 0.0249\ \mathrm{m^3/s}$$

$$\mathrm{V} = \frac{Q}{N_f * b * H_f} \qquad (7.29)$$
$$= \frac{0.0249}{200*0.002*0.025}$$
$$= 2.49\ \mathrm{m/s}$$

The apparent friction factor for hydrodynamically developing flow is related to the fully developed flow friction factor and can be determined from:

$$Re = \frac{V\,d_h}{v} \qquad (7.30)$$
$$= \frac{2*0.0037}{1.516x10^{-5}}$$
$$= 488.62$$

$$L^* = \frac{\frac{L}{d_h}}{Re} \qquad (7.31)$$
$$= \frac{\frac{0.03}{0.0037}}{488.62}$$
$$= 0.0166$$

$$\lambda = \frac{b}{H_f} \qquad (7.32)$$
$$= \frac{0.002}{0.025}$$
$$= 0.08$$

$$f = (24 - 32.527\lambda + 46.721\lambda^2 - 40.829\lambda^3 + 22.954\lambda^4 - 6.089\lambda^5)/Re \qquad (7.33)$$
$$= (24 - 32.527 * 0.08 + 46.721 * 0.08^2 - 40.829 * 0.08^3 + 22.954 * 0.08^4 - 6.089 * 0.08^5)/488.62$$
$$= 0.02943$$

$$f_{app} = \frac{\left[\left(\frac{3.44}{\sqrt{L^*}}\right)^2 + (f\,Re)^2\right]^{1/2}}{Re} \qquad (7.34)$$
$$= \frac{\left[\left(\frac{3.44}{\sqrt{0.0166}}\right)^2 + (0.02943 * 488.62)^2\right]^{1/2}}{488.62}$$
$$= 0.06206$$

The total pressure drop over one heat sink can then be determined from:

$$\Delta P = (K_C + 4f_{app}\frac{L}{d_h} + K_e)\,\rho\frac{V^2}{2} \quad (7.35)$$
$$= (0.1517 + 4 * 0.06206\frac{0.03}{0.0037} + 0.1305)\ 1.204\frac{2^2}{2}$$
$$= 5.53 \text{ Pa}$$

Thus, the total pressure drop across the evaporator will be 88.43 Pa.

For a pressure drop of 88.43 Pa and volume flow rate of 0.494 m^3/s, CPF 400/4-1 axial flow fan with the following specifications will therefore be used:

- Fan Diameter: 400 mm
- Mounting dimensions: 540 mm x 540 mm
- Overall width: 170 mm
- Weight: 7.2 kg
- Input Power: 180 W
- Sound level @ 3m: 59 dBA

7.10 WATER PUMP

The selection of the pump is based on the volume flow rate of the water and the head loss and pressure drop of the system. The total head loss consists of the pressure drop due to friction across the condenser, the pressure drop due to the height of the condenser as well as the pressure drop due to the friction in the pipes from the condenser to the water tank. For these calculations it was assumed that the water tank and heat pump will be installed close to the bathroom and bedroom. A maximum distance of 6 m was therefore used as the distance between the heat pump and water tank. The total head loss can then be determined as follow:

The head loss due to friction inside the condenser:

The velocity of the refrigerant is determined from the mass flow rate equation:

$$\dot{m} = \rho A V \quad (7.36)$$
$$0.0267 = 994 * \frac{\pi}{4}(0.0202^2 - 0.012^2) * V$$
$$V = 0.13035 \text{ m/s}$$

Using equation 7.28 and substituting $d_o - d_i$ for d_h, the Reynolds number can be determined as:

$$Re = \frac{V(d_o - d_i)}{\nu}$$
$$= \frac{0.13035(0.0202 - 0.012)}{0.72x10^{-3}}$$
$$= 1475.67 \quad \text{(Therefore the flow is laminar)}$$

The friction factor can be obtained from:

$$f = \frac{64}{Re} \quad (7.37)$$
$$= \frac{64}{14765.67}$$
$$= 0.0434$$

The head loss due to friction in the condenser tube can be determined as:

$$h_{tube} = \frac{fL}{(d_o - d_i)} \frac{V^2}{2g} \tag{7.38}$$

$$= \frac{0.0434 * 19.3}{(0.0202 - 0.012)} \frac{0.13035^2}{2 * 9.81}$$

$$= 0.0905 \text{ m}$$

The head loss due to friction in the connection tube between the heat pump and water tank can be determined by using equations 7.30, 7.36, 7.37 and 7.38 again:

$$\dot{m} = \rho A V$$
$$0.0267 = 994 * \frac{\pi}{4}(0.0202^2) * V$$
$$V = 0.08435 \text{ m/s}$$

$$Re = \frac{V(d_o - d_i)}{v} = \frac{0.084345 * 0.0202}{0.72x10^{-3}} = 2352 \text{ (Laminar flow)}$$

$$f = \frac{64}{Re} = \frac{64}{2352} = 0.0272$$

$$h_{connec} = \frac{fL}{d} \frac{V^2}{2g} = \frac{0.0272 * 6}{0.0202} \frac{994 * 0.08435^2}{2 * 9.81} = 2.93x10^{-3}\ m$$

The overall head loss that the water pump needs to overcome, is the sum of the head loss due to friction in the condenser tube, the height of the condenser and the head loss due to friction in the connection tube between the heat pump and water tank:

$$h_{tot} = h_{tube} + h_{height} + h_{connec}$$
$$= 0.0973 + 0.345 + 2.93x10^{-3}$$
$$= 0.445\ m$$

The volume flow rate of the water can be determined as follows:

$$Q = \frac{\dot{m}}{\rho}\ x\ 3600 \tag{7.39}$$
$$= \frac{0.08435}{994}\ x\ 3600$$
$$= 0.472\ m^3/h$$

Thus, for the calculated head loss and volume flow rate, the Kwikot IND-CPN-25-4 water pump will be suitable. The specifications of the pump are:

- Inlet/outlet: 38 x 38 mm
- Weight: 3.2 kg
- Rated shut-off: 4.m
- Power: 30 W
- Maximum flow rate: 25 l/min
- Maximum head: 3 m

7.11 COEFFICIENT OF PERFORMANCE

The heat pump will be operated throughout the year; therefore the different temperatures should be taken into account in order to accurately determine the COP. Although these temperatures will differ across the country, this heat pump was designed according to the weather conditions n Pretoria. The monthly average maximum and minimum temperatures for Pretoria are given in the figure below (SA Explorer, 2011):

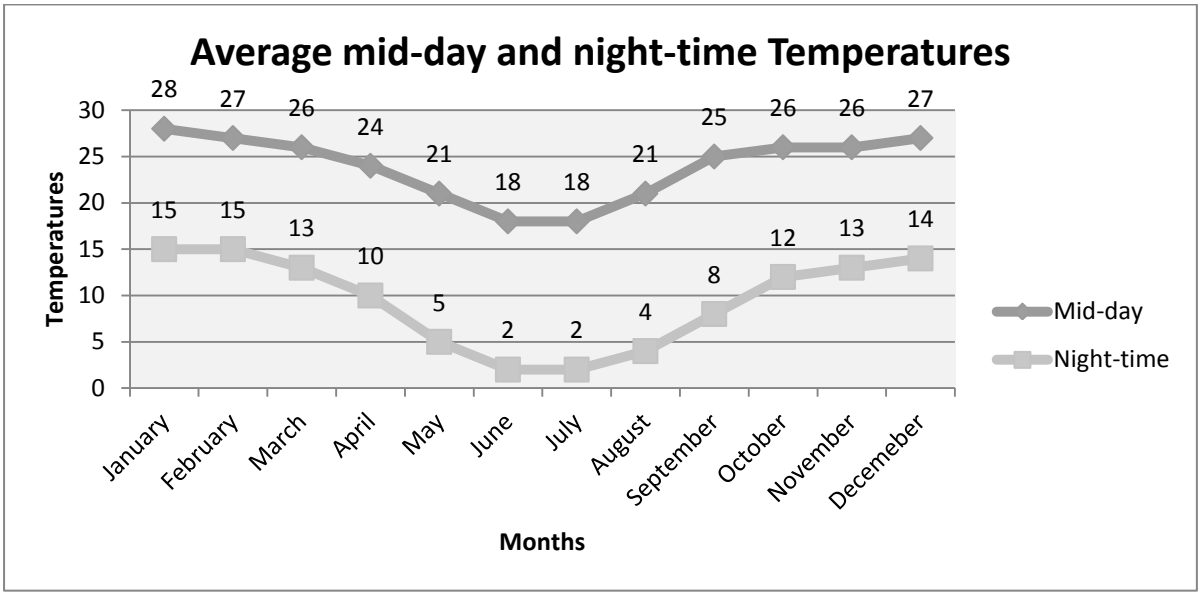

FIGURE 7.9: AVERAGE MID-DAY AND NIGHT-TIME TEMPERATURES

The COP will further be influenced by the temperature of the water that enters the heat pump. At the start-up of the heat pump, the water in the tank will be 20°C. Thus, the water will enter the heat pump at a temperature of 20°C. During operation, the average temperature of the water in the tank will increase and the temperature of the water that enters the tank will increase as well. Thus, the temperature difference will be smaller compared to the start-up of the system. This will influence the COP of the heat pump. However, this heat pump design was based on a condensing temperature of 60°C in order to heat the water to 55°C, therefore it doesn't account for the increasing water temperature. A better approach would have been to design for a temperature rise of 10°C instead. For example, if the water enters the condenser at 10°C, it will leave the condenser at 30°C. The condensing temperature can be assumed to 10°C above the average temperature, therefore 35°C. This will enable the designer to account for the effect of a rising water temperature and the resulting COP will be higher as well. The reason for the higher COP, is because the heat delivered to the water will be more compared to the current design, while the work done by the compressor is less. The area on the T-s diagram is then large flat rectangle instead of an almost square-like shape. This is further illustrated in the figure on the following page:

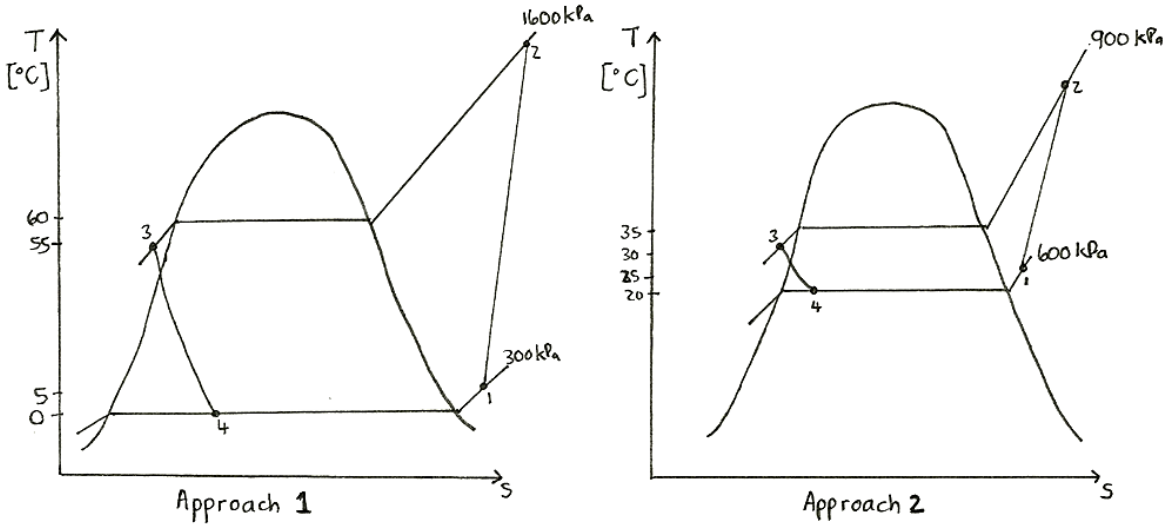

FIGURE 7.10: TWO DIFFERENT APPROACHES

From the figure it follows that the alternative approach would have been indeed better, since it will not only account for the rising water temperature, but will also lead to higher COP values. Unfortunately this approach was not used and it is advised to make use of it when the design is refined in order to finalize and optimize the design before manufacturing.

The COP of this heat pump will be calculated at different evaporator temperatures, in order to account for the different ambient air temperatures, while the condensing temperature will remain at 60°C. The heat pump was designed for the worst condition which is an evaporating temperature of 0°C and the ambient air temperature was assumed to be 10°C. However, if the ambient air temperature rises to 20°C, the evaporating temperature will also rise with 10°C which leads to an evaporating temperature of 10°C.

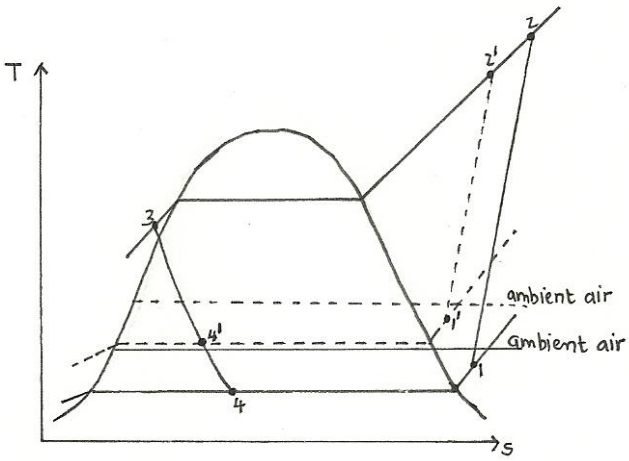

FIGURE 7.11: INFLUENCE OF AMBIENT AIR TEMPERATURE ON EVAPORATING TEMPERATURE

A sample calculation for this case, as well as the tabulated results of higher ambient air temperatures follows. The power of the compressor and the mass flow rate of the refrigerant are dependent on the condensing and evaporating temperatures, therefore these two values will differ for each case.

<u>Point 1</u>:
T = 15 °C P = 400 kPa
From Table B5.2: h_1 = 413.97 kJ/kg

<u>Point 2</u>:
The power of the compressor is 1.55 kW and the mass flow rate of the refrigerant is 0.0293 kg/s. From equation 2.3:

$$\dot{W} = \dot{m}(h_2 - h_1)$$
$$1.55 = 0.0293(h_2 - 413.97)$$
$$h_2 = 466.87 \text{ kJ/kg}$$

<u>Point 3</u>:
T = 55 °C P = 1600 kPa
From Table B5.1: h_3 = 279.72 kJ/kg
From equation 2.1:

$$\dot{Q}_h = \dot{m}(h_2 - h_3)$$
$$= 0.0293(466.87 - 279.72)$$
$$= 5.48 \text{ kW}$$

The COP of the system is the ratio of the heat delivered to the water to the work input of the compressor, pump and fan. Thus, it can be calculated as follows:

$$COP = \frac{\dot{Q}}{W_{comp}+W_{pump}+W_{fan}} \quad (7.40)$$
$$= \frac{5480}{1410+180+30}$$
$$= 3.12$$

The results for the other cases are tabulated below:

TABLE 7.1: COP VALUES AT DIFFERENT AMBIENT TEMPERATURES

Evaporating Temperature	**Ambient Air Temperature**	**Compressor Power**	**Mass Flow Rate**	**Heat Delivered**	**Total Work Done**	**COP**
0°C	10°C	1.41 kW	0.0205 kg/s	3.93 kW	1.62 kW	2.43
5°C	15°C	1.48 kW	0.0247 kg/s	4.6 kW	1.69 kW	2.72
10°C	20°C	1.55 kW	0.0293 kg/s	5.48 kW	1.76 kW	3.11
15°C	25°C	1.64 kW	0.0346 kg/s	6.20 kW	1.85 kW	3.35
20°C	30°C	1.64 kW	0.0346 kg/s		1.85 kW	3.42
					Average COP	**3**

From the results above, the average COP of the heat pump is determined to be 3. It can also be concluded that the COP increases with increasing ambient temperature, therefore heat pumps will be more efficient for example in Durban, compared to Bloemfontein.

If the other approach using a constant temperature of 10°C were used, the COP of the heat pump would have been significantly higher. A sample calculation to prove this statement is given below:

The water enters the condenser at 20°C and leaves it at 30°C. Therefore the evaporating and condensing temperatures are taken as 20°C and 35°C respectively.

<u>Point 1</u>:
T = 25 °C P = 600 kPa
From Table B5.2: h_1 = 414.88 kJ/kg

<u>Point 2</u>:
The power of the compressor is 1.64 kW and the mass flow rate of the refrigerant is 0.0304 kg/s. From equation 2.3:

$$\dot{W} = \dot{m}(h_2 - h_1)$$
$$1.17 = 0.0304(h_2 - 414.88)$$
$$h_2 = 453.37 \text{ kJ/kg}$$

<u>Point 3</u>:
T = 30 °C P = 900 kPa
From Table B5.1: h_3 = 241.79 kJ/kg
From equation 2.1:

$$\dot{Q}_h = \dot{m}(h_2 - h_3)$$
$$= 0.0304(453.37 - 241.79)$$
$$= 6.432 \text{ kW}$$

The COP of the system is the ratio of the heat delivered to the water to the work input of the compressor, pump and fan. Thus, it can be calculated as follows:

From equation 7.40:

$$COP = \frac{\dot{Q}}{W_{comp}+W_{pump}+W_{fan}}$$

$$= \frac{6\,432}{1\,170+180+30}$$

$$= 4.66$$

7.12 VIBRATION AND NOISE LEVELS

The usual sound of the heat pump will be the noise of the fan as well as a hum due to the refrigerant flow. Noise will also be caused by the air moving between the evaporator fins, but since the 2 mm gaps between the fins are significantly larger than the 0.5 mm thick fins, this can be neglected. Therefore, it can therefore be assumed that the most noise will be caused by the fan and the vibrations of the components in the cabinet. The vibrations of the components in the cabinet can be minimized by providing adequate damping material.

The base plate of the cabinet will be lined with a 3 mm rubber sheet on the inside. This will reduce most of the vibrations in the casing.

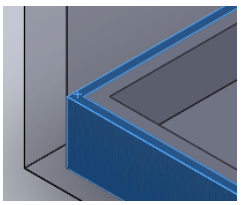

FIGURE 7.12: RUBBER SHEET

Small rubber sheet squares will also be placed between the top cover and the supports, where the fan plates are bolted to the top cover. Furthermore, rubber sheet squares will also be placed between the base plate and the evaporator supports where it is bolted together.

A 3 mm rubber sheet will also be placed underneath the condenser and compressor to prevent further vibrations.

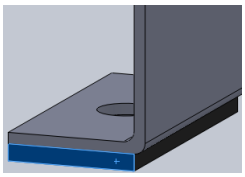

FIGURE 7.13: RUBBER SQUARES

Rubber mounting feet will also be used to mount the heat pump cabinet to the mounting brackets in order to reduce vibrations.

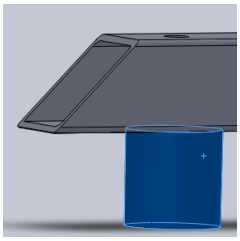

FIGURE 7.14: RUBBER FEET

The noise levels due to the vibrations of the components in the casing and the refrigerant flow can subsequently be assumed to be negligible. Thus, the noise levels of the heat pump will be assumed to be more or less the same as that of the fan, which is 59 dBA. This is slightly higher than the desired noise level of 55 dB, but since the fan will be inside the heat pump casing and the rated noise level is for a fan that is not covered at all, it can be assumed that the desired noise levels will be achieved.

7.13 ELECTRICAL UNIT (CONTROL SYSTEM)

The design of the control system is beyond the scope of this project, but its main functions will be discussed briefly.

The water temperature will be set and controlled by changing the compressor and fan set-points. It should also contain a warning system capable of signaling when a component is malfunctioning or when there is a blockage in the water flow.

The temperature of the water that enters the heat pump will be measured by a heat sensor at the bottom of the tank. As soon as this temperature is less than 45 °C, the heat pump will switch on and heat the water until the temperature is 50 °C. Since this temperature is measured at the bottom of the tank, the water temperature at the top of the tank should be approximately 55 °C.

A controller display will be mounted on the side of the heat pump casing. The inlet water temperature will be displayed along with the time. Since the inlet water temperature will be less than the temperature of the water available at the taps, the maximum setting for the temperature will be 50 °C. The time setting can be used to allow the unit to operate, for example, during day-time only.

All electrical work should be undertaken by a licensed electrician with the Electrical Contractors Board and CoC must be issued.

7.14 MASS FACTORS

The following table contains the mass of the heat pump components:

Component	Mass [kg]
Compressor	25.84
Condenser	14.3
Expansion valve	0.135
Evaporator	9.638
Suction Accumulator	1.27
Fan	7.2
Pump	3.2
Electrical Unit	0.5
Cabinet	3
Miscellaneous	2.5
Total Mass	**70**

Thus the overall weight of the heat pump can be estimated to be 70 kg. Although this is greater than the required 60 kg, it should be kept in mind that this is only a first order design and the heat pump can still be optimised in order to reduce the overall weight.

7.15 CABINET AND MOUNTING

Powder-coated mild steel will be used for the cabinet in order to prevent corrosion. The top cover of the cabinet will be manufactured from 1.6 mm mild steel, while the bottom plate will be thicker (10 mm) in order to provide stability and rigidity. These will then be powder coated.

A mesh cover will also be used to cover the fan and evaporator to prevent leaves or other objects to enter the heat pump. These two covers are shown in the figure on the right which is a back view of the heat pump cover.

FIGURE 7.15: FAN AND EVAPORATOR COVERS

Two mounting brackets will be used to mount the heat pump to the wall. A mounting bracket consists of square tubing and 10 mm roll bolts with coil spring nuts. Rubber mounting feet will also be positioned between the heat pump and the mountings in order to reduce vibration and noise. The overall weight of the heat pumps is estimated to be 70 kg. Since there are two mounting brackets, each one should be able to support 35 kg.

The following calculations will determine whether 32 x 32 x2.5 mm square tubing will be adequate:

The dimensions and properties for this hollow square section are (South African Institute of Steel Construction, 2010):

h = b = 38 mm t = 2.5 mm m = 2.83 kg/m Z_{pl} = 4.43x10³ mm³
For Structural Steel (Standards South Africa, 2005): f_y = 200 MPa ⌀ = 0.9

For class 1 sections:

$$\frac{b}{t} \leq \frac{420}{\sqrt{f_y}} \tag{7.39}$$

$$\frac{b}{t} = \frac{38}{2.5} = 15.2$$

$$\frac{420}{\sqrt{f_y}} = \frac{420}{\sqrt{200}} = 29.7 > 15.2$$

Thus, it is a class 1 section.

The heat pump load on the mounting bracket can be approximated as a uniform distributed load on a cantilever beam. The shear force and bending moment diagrams are shown in the figure on the right. The maximum bending moment will be at the fixed end.

The distributed load can be calculated by multiplying half of the heat pump's mass with gravity and dividing it by the length of the beam which is 55 cm. Thus, w = 624.27 N/m.

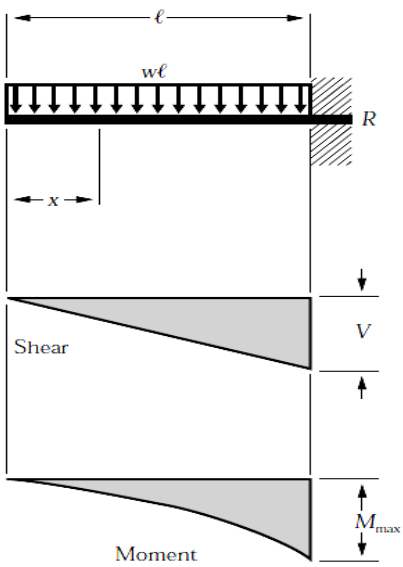

FIGURE 7.16: SHEAR FORCE AND BENDING MOMENT DIAGRAMS

The maximum bending moment can then be calculated as follows:

$$M_u = \frac{wL^2}{2} \tag{7.40}$$
$$= \frac{624.27 * 0.55^2}{2}$$
$$= 94.42 \text{ Nm}$$

The factored moment resistance should be greater than the maximum bending moment. For class 1 hollow square sections, it can be determined as follows:

$$M_r = \emptyset\, Z_{pl}\, f_y \tag{7.41}$$
$$= 0.9 * (3.65x10^3)x10^{-9} * 200x10^6$$
$$= 797.4 \text{ Nm} > M_u$$

Therefore two 32 x 32 x 2.5 mm square tubes with a length of 55 cm will be adequate to mount the heat pump.

The square tubes will be welded to a 4.5 mm mild steel plate which will be fixed to the wall using 10 mm roll bolts.

The following calculations will determine whether a 2 mm weld will be adequate: (Budynas & Nisbett, 2008, pp. 469-477)

The throat area and second moment of area for the weld can be determined as:

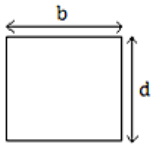

FIGURE 7.17: WELD DIMENSIONS

$$A = 1.414\, h(b + d) \tag{7.42}$$
$$= 1.414 * 2(38 + 38)$$
$$= 241.93 \text{ mm}^2$$

$$I_u = \frac{d^2}{6}(3b + d) \tag{7.43}$$
$$= \frac{38^2}{6}(3 * 38 + 38)$$
$$= 36\,581.33 \text{ mm}^3$$

$$I = 0.707\, h\, I_u \tag{7.44}$$
$$= 0.707 * 2 * 36\,581.33$$
$$= 51\,726 \text{ mm}^4$$

The primary and secondary shear can be using the following equations:

$$\tau' = \frac{F}{A} \tag{7.45}$$
$$= \frac{35*9.81}{241.93}$$
$$= 1.419 \text{ MPa}$$

$$\tau'' = \frac{Mr}{I} \tag{7.46}$$
$$= \frac{35*9.81*19*55}{51\,726}$$
$$= 6.937 \text{ MPa}$$

The shear magnitude is the Pythagorean combination of the primary and secondary shear:

$$\tau = \sqrt{\tau'^2 + \tau''^2} \tag{7.47}$$
$$= \sqrt{1.419^2 + 6.937^2}$$
$$= 7.08 \text{ MPa}$$

The maximum allowable shear stress for an E60 weld metal is 124 MPa, therefore the weld will be adequate.

The following calculations will check whether the 10 mm roll bolts will be adequate: (Standards South Africa, 2005)

$$V_r = 0.6\emptyset_b A_b fu \tag{7.48}$$
$$= 0.6 * 0.8 * \frac{\pi}{4} 10^2 * 830$$
$$= 11 \text{ kN} > 343 \text{ N}$$

Therefore the roll bolts will be adequate.

7.16 CONCLUSION

The helically coiled tubular condenser and plate-and-fin evaporator have been designed in detail, while the compressor, fan, suction accumulator and water pump have been scientifically selected. The condenser consists of an 11 mm diameter inner tube and 22 mm diameter outer tube, coiled with a diameter of 40 cm. Two-hundred equally spaced aluminium fins each with a dimension 50 mm x 498 mm x 0.5mm is used to construct the evaporator. An 11 mm diameter tube directs the refrigerant through these 2 mm spaced fins. The compressor, fan and water pump have flow rates of 0.0205 kg/s, 0.494 m^3/s and 0.472 m^3/h respectively. The cabinet of the heat pump, as well as the mounting brackets, have also been designed. Furthermore, the materials have been specified and the total mass of the heat pump as well as the noise levels have been estimated to be 70 kg and 55 dB. The average COP of the heat pump is estimated to be 3 suggesting 67% efficiency. Water with a temperature of 20°C can be heated to a maximum temperature of 55°C with the heat pump.

8. DRAWINGS

8.1. INTRODUCTION

This chapter contains drawings of the heat pump, condenser and evaporator. Manufacturing drawings of the evaporator are also provided. The heat pump components have been modeled and assembled on Solidworks.

8.2 ASSEMBLY DRAWINGS

An assembly drawing of the heat pump, condenser and evaporator were made. Two additional assembly drawings with different section views are also provided in order to show all the detail of the components. A part list, as well as the material and quantity of the components, has also been provided. It will therefore be possible for a technician to assemble the heat pump, condenser and evaporator from these drawings.

8.3 DETAIL DRAWINGS

Detail drawings of the evaporator tubes and the second evaporator plate were made. These drawings will enable someone to manufacture the components since they contain all the necessary dimensions, tolerances and surface finishes, as well as the specific materials.

8.4 FREE HAND SKETCHES

This type of drawing is very important, since it will be done by an engineer or designer and then given to draftsmen to make proper manufacturing drawings. Therefore it should contain all the necessary dimensions, tolerances and surface finishes and the material should be specified, as well. Free hand sketches of the evaporator fin and the first evaporator plate were made.

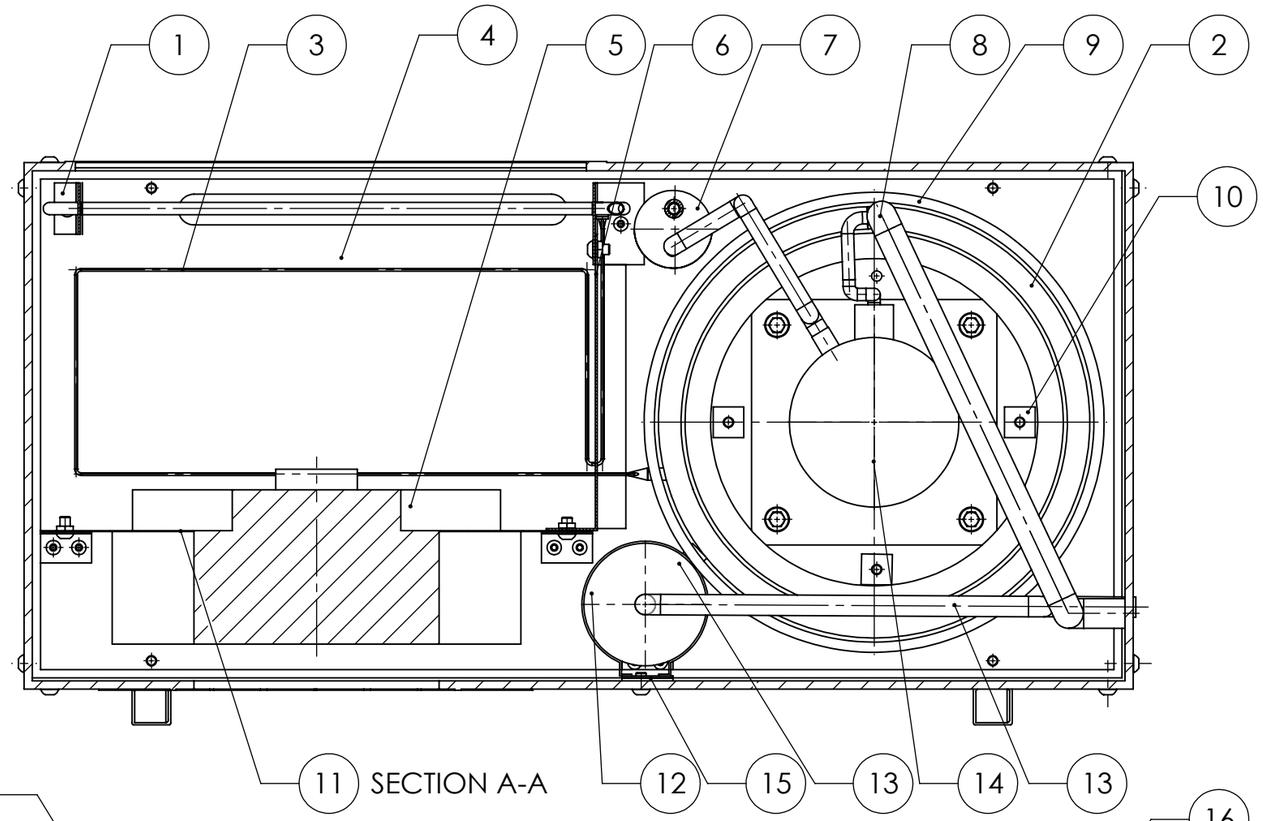

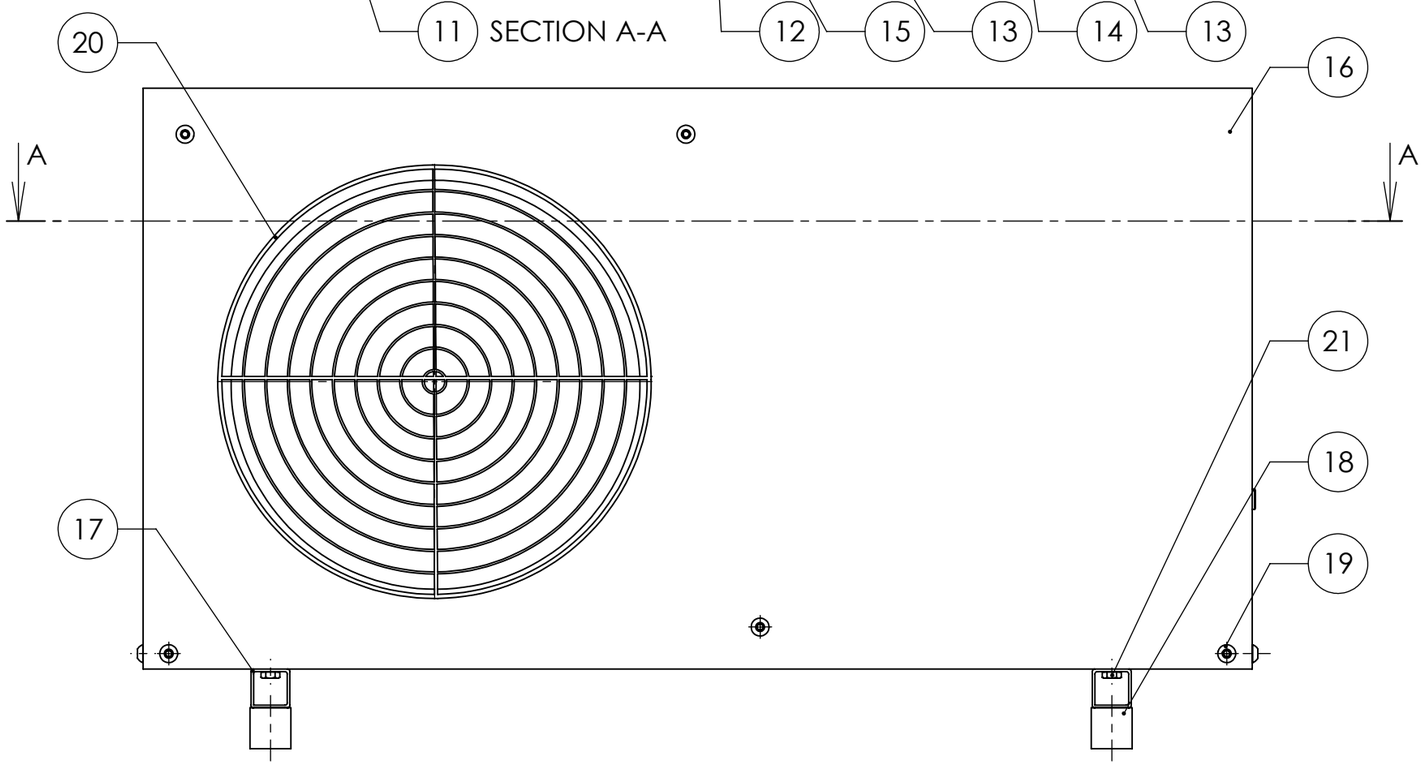

25	4	M16 HEX NUT	STEEL	25
24	4	M10 HEX NUT	STEEL	24
23	37	M8 HEX NUT	STEEL	23
22	4	M16 X 25 SOCKET HEAD CAP SCREW	STEEL	22
21	4	M10 X 20 HEX BOLT	STEEL	21
20	1	FAN COVER	STEEL	20
19	37	M8 x 16 INNER HEX BOLT	STEEL	19
18	4	DAMPING FOOT	RUBBER	18
17	2	CABINET FOOT	MILD STEEL	17
16	1	TOP COVER	MILD STEEL	16
15	5	DAMPING PAD	RUBBER	15
14	1	COMPRESSOR		14
13	1	∅20 UNINSULATED TUBE	COPPER	13
12	1	WATER PUMP		12
11	1	FAN PLATE	MILD STEEL	11
10	3	SUPPORTS	MILD STEEL	10
9	3	INSULATION		9
8	1	∅20 INSULATED TUBE	COPPER	8
7	1	SUCTION ACCUMULATOR		7
6	1	DIVIDING PLATE	MILD STEEL	6
5	1	FAN		5
4	1	BASE PLATE	ALUMINIUM	4
3	1	EXPANSION VALVE	COPPER	3
2	1	CONDENSER		2
1	1	EVAPORATOR		1

1. I understand what plagiarism is and am aware of the University's policy in this regard.
2. I declare that this drawing is my own original work.
3. I have not used another student's past work to hand in as my own.
4. I have not allowed, and will not allow, anyone to copy my work with the intention of passing it off as his or her own work.

TOLERANCES FROM - TO	+/-
0 - 6	0.1
6 - 30	0.2
30 - 100	0.3
100 - 300	0.5
300 - 1000	0.8
1000 - 3000	1.2
3000 - PLUS	2.0
ANGLES	1°

ITEM NR / ITEM NO | AANTAL / QUANTITY | BESKRYWING / DESCRIPTION | MATERIAAL / MATERIAL | ONDERDEEL NR / PART NR

VAN / SURNAME: EVERTS
VOORLETTERS / INITIALS: M
TITEL / TITLE: ASSEMLY
STUDENTE NO / STUDENTE NR: 29037078
RIGTING / DISCIPLINE: M
TEKENING NR / DRAWING NR: MOX_1
PROJEKSIE / PROJECTION
UNIVERSITEIT VAN PRETORIA
UNIVERSITY OF PRETORIA
A3
SKAAL / SCALE: 1:6
DATUM / DATE: 2012/05/31

C:\Users\Marilize Everts\Documents\BIng (Meganies)\4eJaar\MOX410\Design Drawings\Heat Pump Assembly Last saved 02 June 2012 09:44:34 AM

VOLTOOI TITELBLOK IN SWART INK/COMPLETE TITLEBLOCK IN BLACK INK

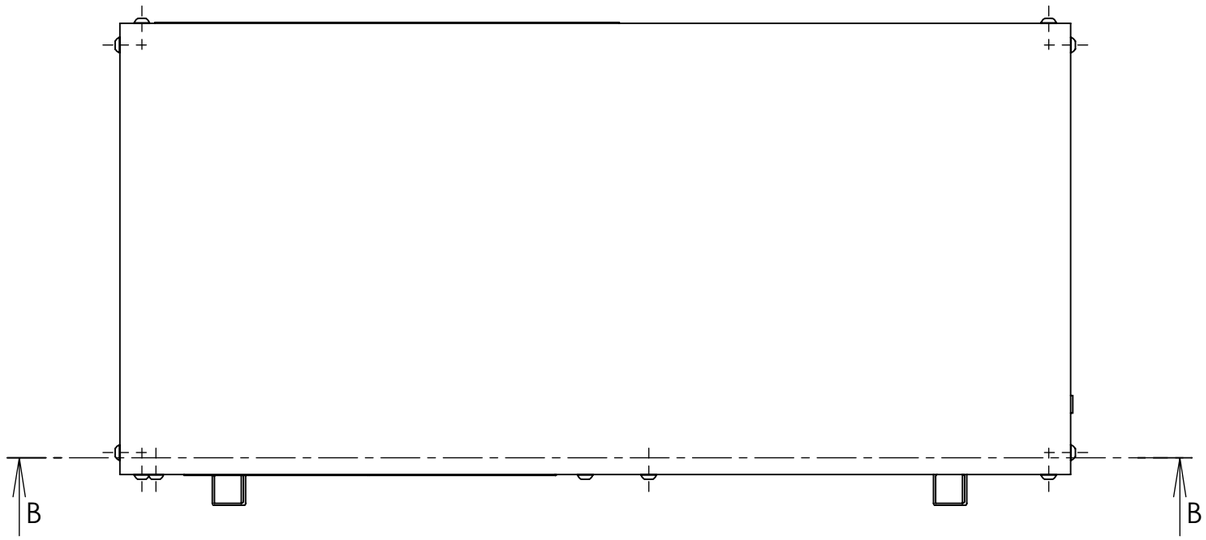

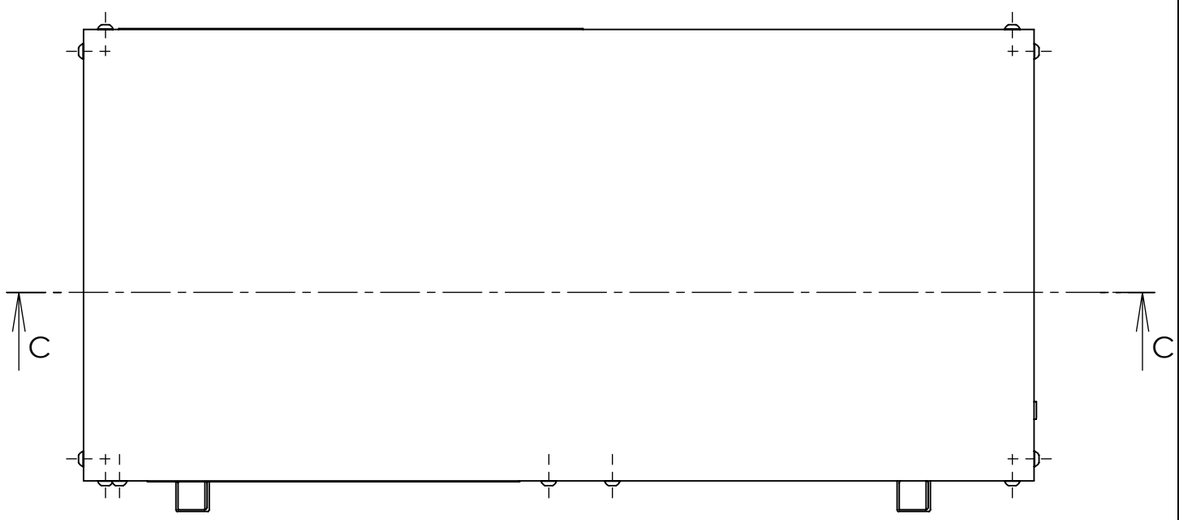

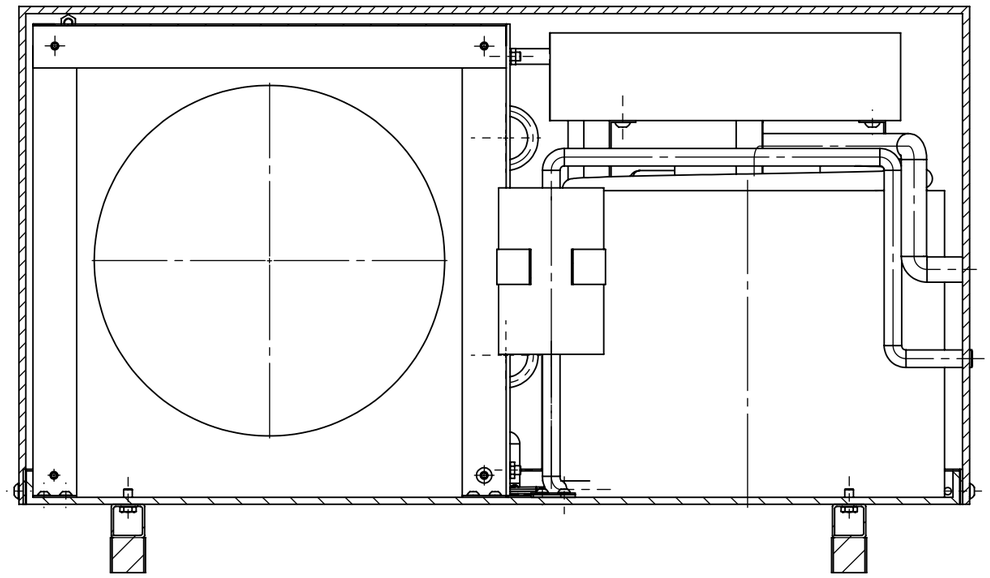

SECTION B-B

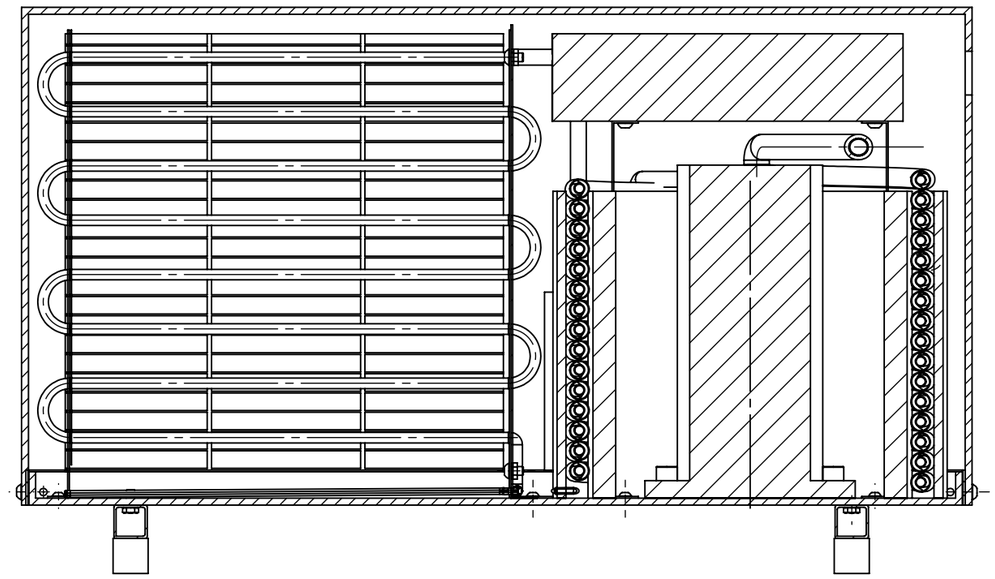

SECTION C-C

1. I understand what plagiarism is and am aware of the University's policy in this regard.
2. I declare that this drawing is my own original work.
3. I have not used another student's past work to hand in as my own.
4. I have not allowed, and will not allow, anyone to copy my work with the intention of passing it off as his or her own work.

TOLERANCES	
FROM - TO	+/-
0 - 6	0.1
6 - 30	0.2
30 - 100	0.3
100 - 300	0.5
300 - 1000	0.8
1000 - 3000	1.2
3000 - PLUS	2.0
ANGLES	1°

ITEM NR / ITEM NO	AANTAL / QUANTITY	BESKRYWING / DESCRIPTION	MATERIAAL / MATERIAL	ONDERDEEL NR / PART NR

VAN / SURNAME	EVERTS	VOORLETTERS / INITIALS	M	TITEL / TITLE	ASSEMBLY DETAIL
STUDENTE NO / STUDENTE NR	29037078	RIGTING / DISCIPLINE	M	TEKENING NR / DRAWING NR	MOX_2
PROJEKSIE / PROJECTION		UNIVERSITEIT VAN PRETORIA / UNIVERSITY OF PRETORIA	A3	SKAAL / SCALE 1:7	DATUM / DATE 2012/05/31

VOLTOOI TITELBLOK IN SWART INK/COMPLETE TITLEBLOCK IN BLACK INK

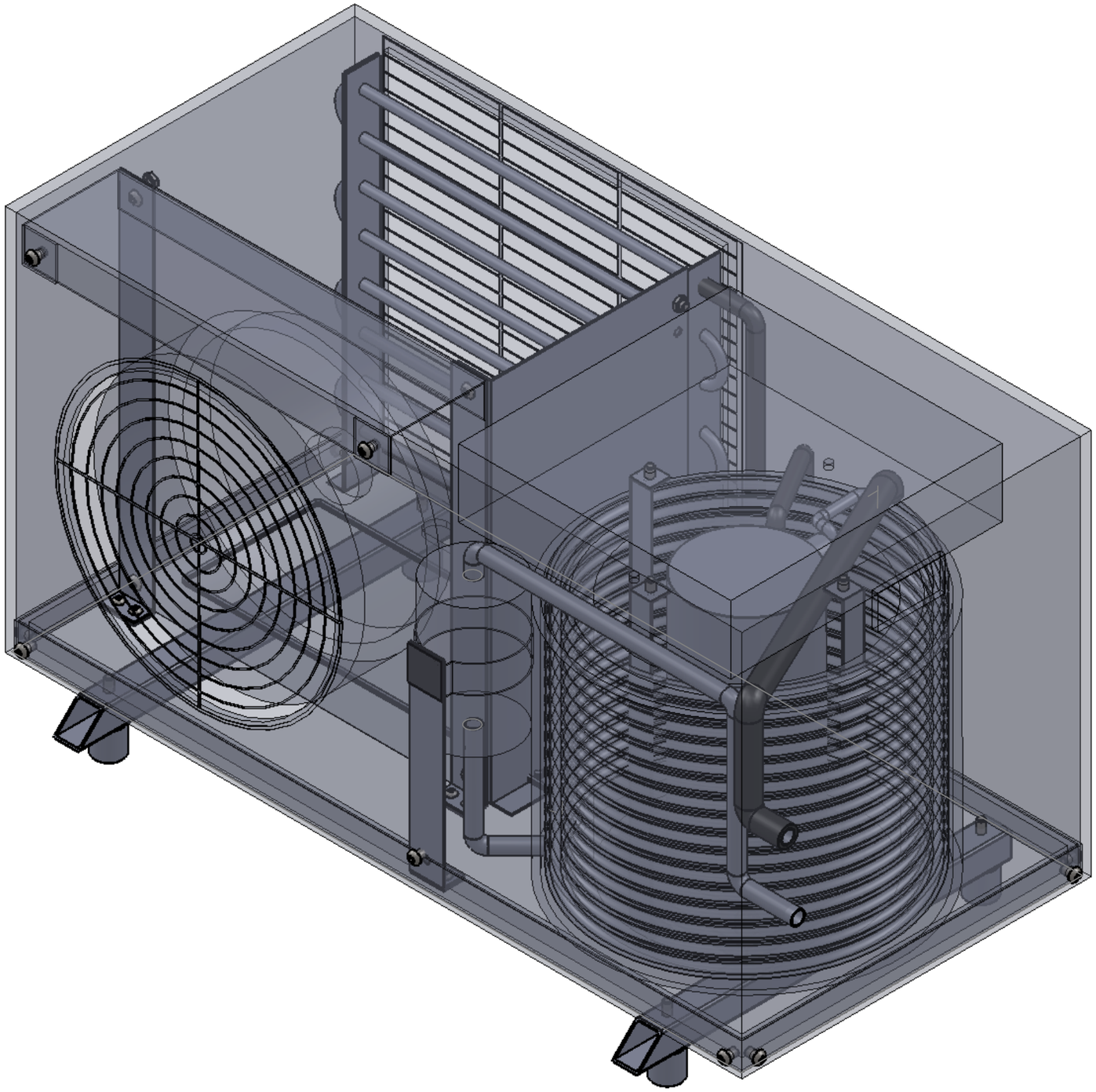

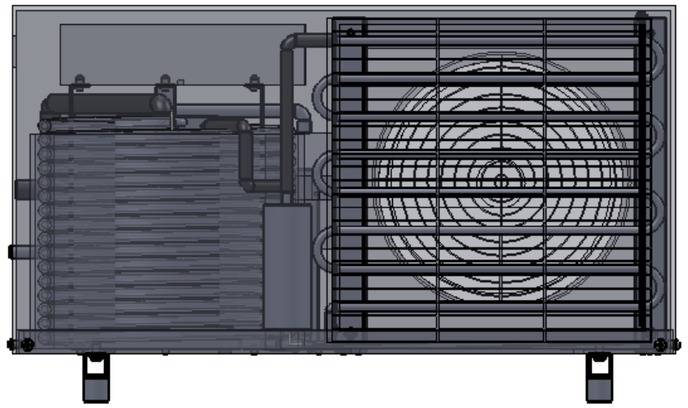

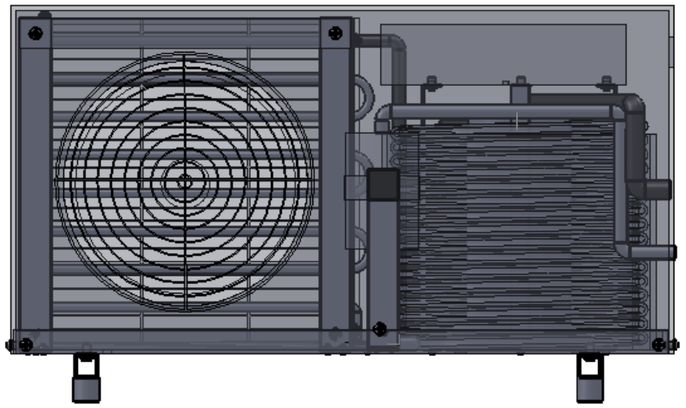

1. I understand what plagiarism is and am aware of the University's policy in this regard.
2. I declare that this drawing is my own original work.
3. I have not used another student's past work to hand in as my own.
4. I have not allowed, and will not allow, anyone to copy my work with the intention of passing it off as his or her own work.

TOLERANCES	
FROM - TO	+/-
0 - 6	0.1
6 - 30	0.2
30 - 100	0.3
100 - 300	0.5
300 - 1000	0.8
1000 - 3000	1.2
3000 - PLUS	2.0
ANGLES	1°

ITEM NR / ITEM NO	AANTAL / QUANTITY	BESKRYWING / DESCRIPTION	MATERIAAL / MATERIAL	ONDERDEEL NR / PART NR

VAN / SURNAME	EVERTS	VOORLETTERS / INITIALS	M	TITEL / TITLE	ISOMETRIC
STUDENTE NO / STUDENTE NR	29037078	RIGTING / DISCIPLINE	M	TEKENING NR / DRAWING NR	MOX_3
PROJEKSIE / PROJECTION		UNIVERSITEIT VAN PRETORIA / UNIVERSITY OF PRETORIA	A3	SKAAL / SCALE 1:5	DATUM / DATE 2012/05/31

C:\Users\Marilize Everts\Documents\BIng (Meganies)\4eJaar\MOX410\Design Drawings\Heat Pump Assembly Last saved 02 June 2012 09:44:34 AM

VOLTOOI TITELBLOK IN SWART INK/COMPLETE TITLEBLOCK IN BLACK INK

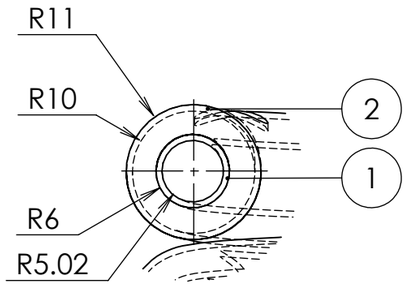

DETAIL A
SCALE 1 : 1

COVER PLATE SOLDERED TO TUBES

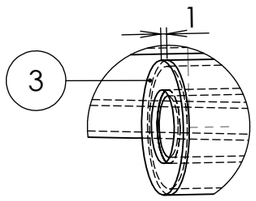

DETAIL B
SCALE 1 : 1

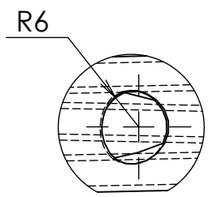

DETAIL C
SCALE 1 : 1

DETAIL SIMILAR TO DETAIL VIEW C

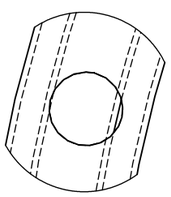

DETAIL D
SCALE 1 : 1

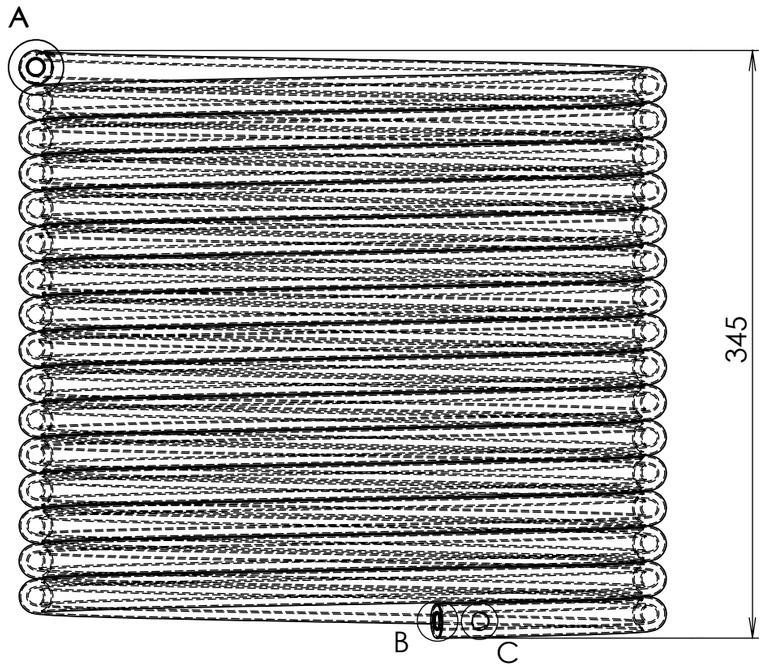

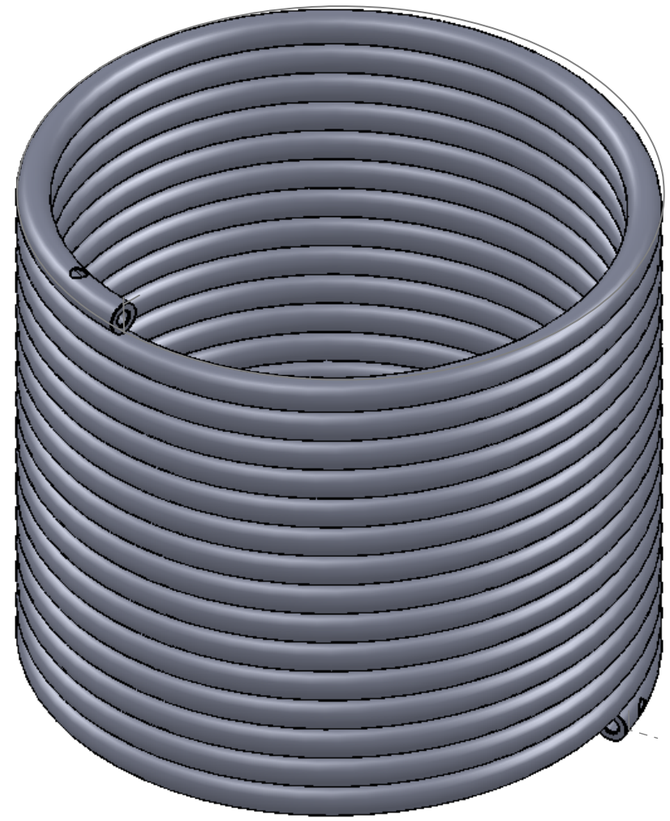

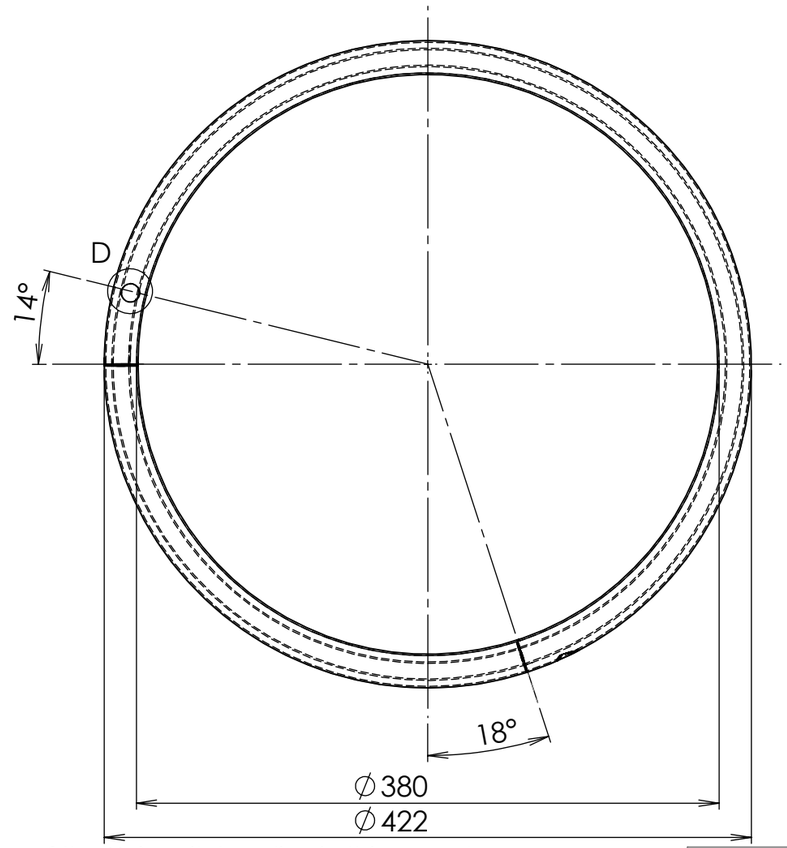

3.2 GENERAL SURFACE FINISH

3	2	TUBE COVER	COPPER	3
2	1	∅22 TUBE	COPPER CLASS 1	3
1	1	∅12 TUBE	COPPER CLASS 1	3
ITEM NR ITEM NO	AANTAL QUANTITY	BESKRYWING DESCRIPTION	MATERIAAL MATERIAL	ONDERDEEL NR PART NR

1. I understand what plagiarism is and am aware of the University's policy in this regard.
2. I declare that this drawing is my own original work.
3. I have not used another student's past work to hand in as my own.
4. I have not allowed, and will not allow, anyone to copy my work with the intention of passing it off as his or her own work.

TOLERANCES	
FROM - TO	+/-
0 - 6	0.1
6 - 30	0.2
30 - 100	0.3
100 - 300	0.5
300 - 1000	0.8
1000 - 3000	1.2
3000 - PLUS	2.0
ANGLES	1°

VAN SURNAME	EVERTS	VOORLETTERS INITIALS	M
STUDENTE NO STUDENTE NR	29037078	RIGTING DISCIPLINE	M
PROJEKSIE PROJECTION			

TITEL TITLE	CONDENSER		
TEKENING NR DRAWING NR	MOX_4		
UNIVERSITEIT VAN PRETORIA **UNIVERSITY OF PRETORIA**	A3	SKAAL SCALE 1:4	DATUM DATE 2012/05/17

VOLTOOI TITELBLOK IN SWART INK/COMPLETE TITLEBLOCK IN BLACK INK

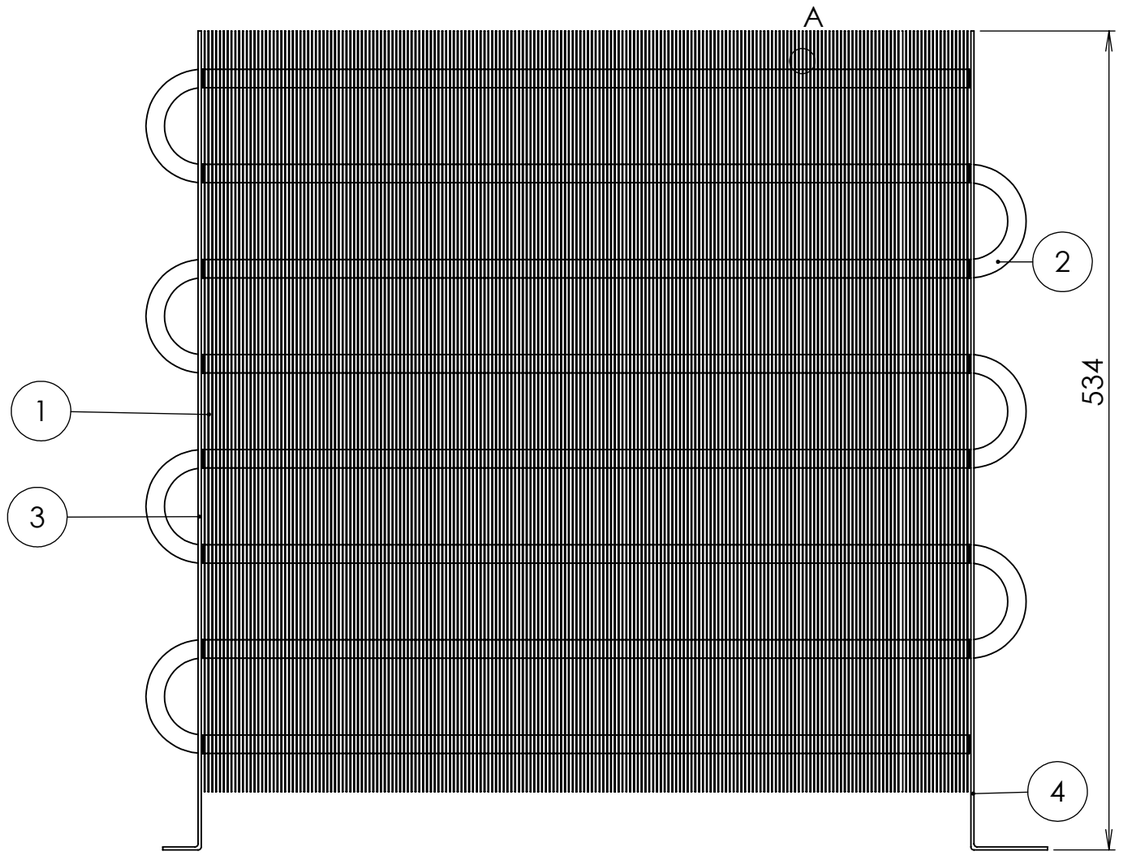

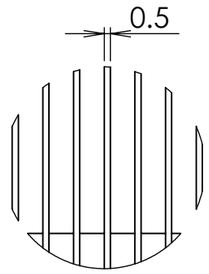

DETAIL A
SCALE 2 : 1

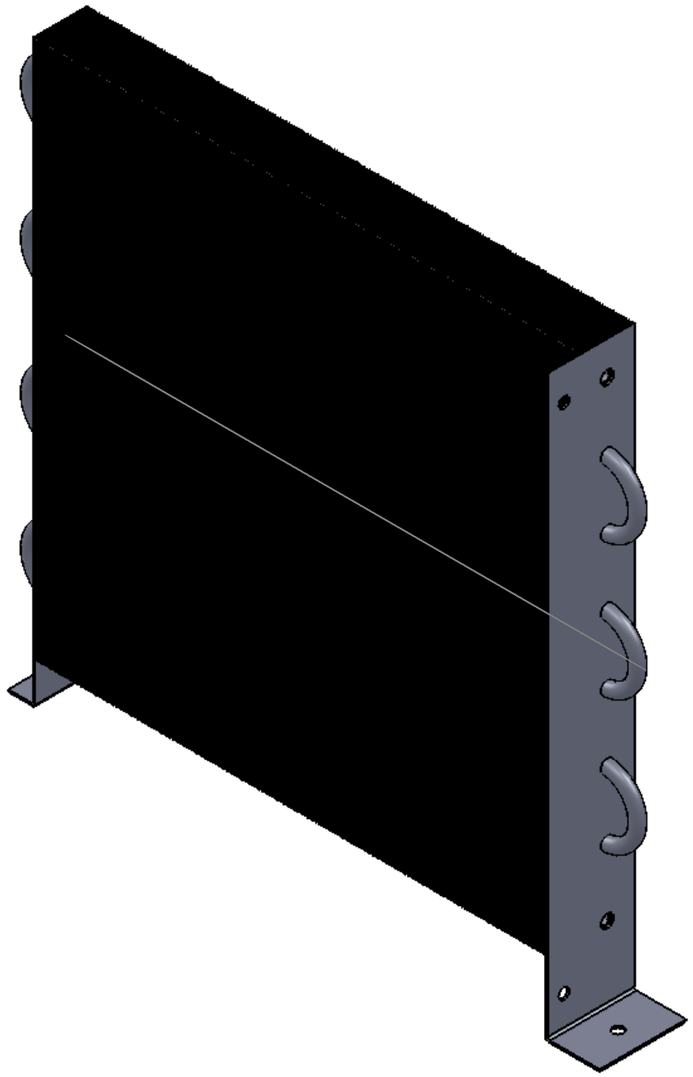

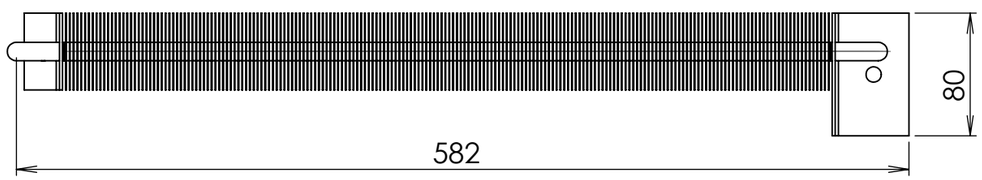

4	1	EVAPORATOR PLATE 2	MILD STEEL	1
3	1	EVAPORATOR TUBE	COPPER	1
2	1	EVAPORATOR PLATE 1	MILD STEEL	1
1	200	EVAPORATOR FIN	ALUMINIUM	1
ITEM NR ITEM NO	AANTAL QUANTITY	BESKRYWING DESCRIPTION	MATERIAAL MATERIAL	ONDERDEEL NR PART NR

1. I understand what plagiarism is and am aware of the University's policy in this regard.
2. I declare that this drawing is my own original work.
3. I have not used another student's past work to hand in as my own.
4. I have not allowed, and will not allow, anyone to copy my work with the intention of passing it off as his or her own work.

TOLERANCES FROM - TO	+/-
0 - 6	0.1
6 - 30	0.2
30 - 100	0.3
100 - 300	0.5
300 - 1000	0.8
1000 - 3000	1.2
3000 - PLUS	2.0
ANGLES	1°

VAN SURNAME	EVERTS	VOORLETTERS INITIALS	M
STUDENTE NO STUDENTE NR	29037078	RIGTING DISCIPLINE	M
PROJEKSIE PROJECTION		UNIVERSITEIT VAN PRETORIA UNIVERSITY OF PRETORIA	A3

TITEL TITLE	EVAPORATOR
TEKENING NR DRAWING NR	MOX_5
SKAAL SCALE	1:4
DATUM DATE	2012/05/16

C:\Users\Marilize Everts\Documents\BIng (Meganies)\4eJaar\MOX410\Design Drawings\Evaporator\Evaporator Last saved 01 June 2012 09:39:20 PM

VOLTOOI TITELBLOK IN SWART INK/COMPLETE TITLEBLOCK IN BLACK INK

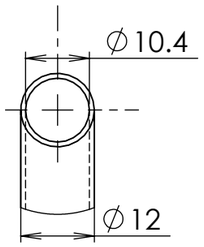

DETAIL A
SCALE 1 : 1

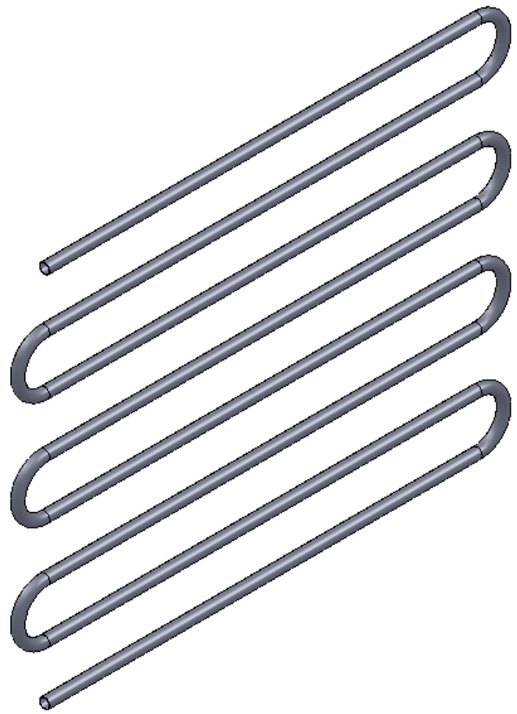

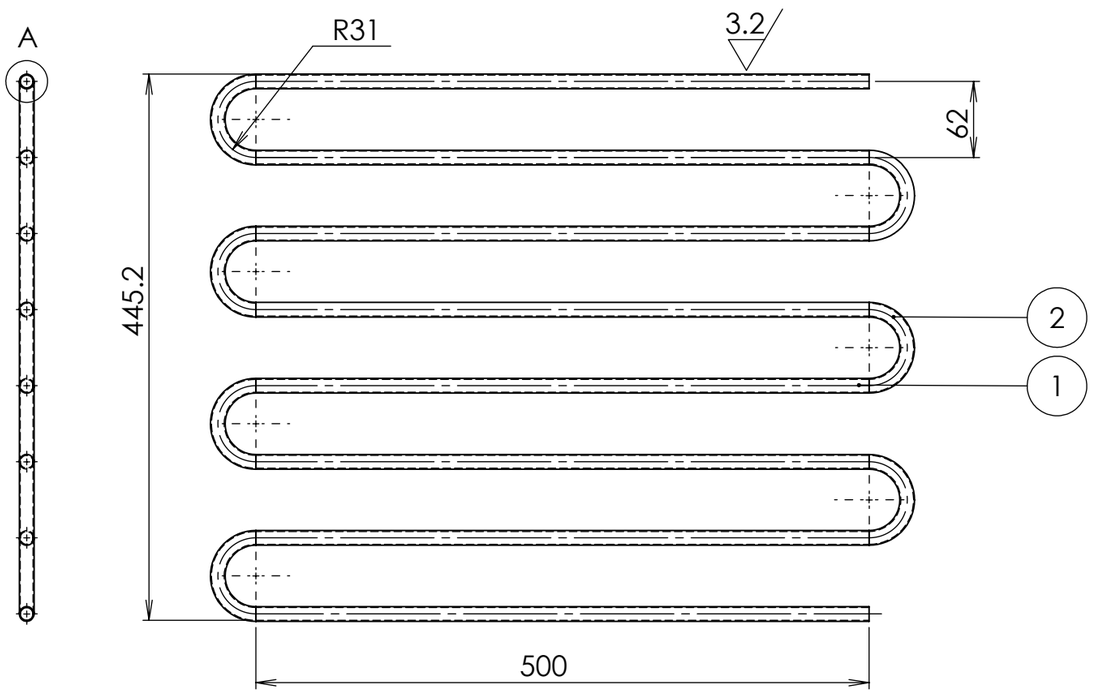

COPPER TUBE SECTIONS SOLDERED TOGETHER

1. I understand what plagiarism is and am aware of the University's policy in this regard.
2. I declare that this drawing is my own original work.
3. I have not used another student's past work to hand in as my own.
4. I have not allowed, and will not allow, anyone to copy my work with the intention of passing it off as his or her own work.

TOLERANCES FROM - TO	+/-
0 - 6	0.1
6 - 30	0.2
30 - 100	0.3
100 - 300	0.5
300 - 1000	0.8
1000 - 3000	1.2
3000 - PLUS	2.0
ANGLES	1°

ITEM NR ITEM NO	AANTAL QUANTITY	BESKRYWING DESCRIPTION	MATERIAAL MATERIAL	ONDERDEEL NR PART NR
2	7	EVAPORATOR BEND	COPPER CLASS1	1
1	8	EVAPORATOR TUBE	COPPER CLASS1	1

VAN SURNAME	EVERTS	VOORLETTERS INITIALS	M
STUDENTE NO STUDENTE NR	29037078	RIGTING DISCIPLINE	M
TITEL TITLE	EVAPORATOR TUBE	TEKENING NR DRAWING NR	MOX_6
PROJEKSIE PROJECTION		SKAAL SCALE	1:10
DATUM DATE	2012/05/16		

UNIVERSITEIT VAN PRETORIA
UNIVERSITY OF PRETORIA

A3

C:\Users\Marilize Everts\Documents\BIng (Meganies)\4eJaar\MOX410\Design Drawings\Detail Drawings\Evaporator Tube Last saved 01 June 2012 09:43:13 PM

VOLTOOI TITELBLOK IN SWART INK/COMPLETE TITLEBLOCK IN BLACK INK

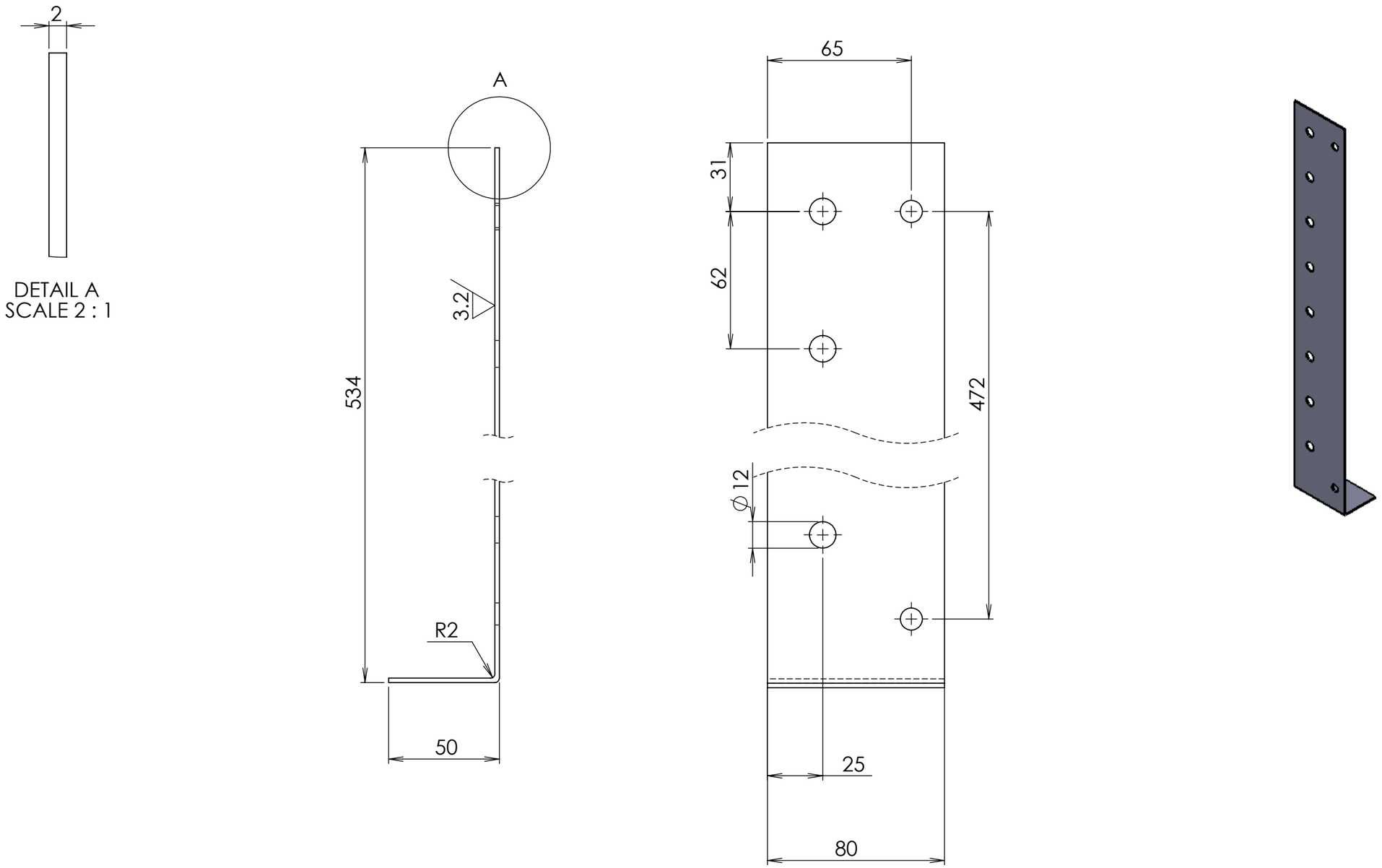

1. I understand what plagiarism is and am aware of the University's policy in this regard.
2. I declare that this drawing is my own original work.
3. I have not used another student's past work to hand in as my own.
4. I have not allowed, and will not allow, anyone to copy my work with the intention of passing it off as his or her own work.

TOLERANCES FROM - TO	+/-
0 - 6	0.1
6 - 30	0.2
30 - 100	0.3
100 - 300	0.5
300 - 1000	0.8
1000 - 3000	1.2
3000 - PLUS	2.0
ANGLES	1°

ITEM NR / ITEM NO	AANTAL / QUANTITY	BESKRYWING / DESCRIPTION	MATERIAAL / MATERIAL	ONDERDEEL NR / PART NR
1	1	EVAPORATOR PLATE 2	MILD STEEL	1

VAN / SURNAME	EVERTS	VOORLETTERS / INITIALS	M
STUDENTE NO / STUDENTE NR	29037078	RIGTING / DISCIPLINE	M
PROJEKSIE / PROJECTION		UNIVERSITEIT VAN PRETORIA / UNIVERSITY OF PRETORIA	A3

TITEL / TITLE	EVAPORATOR PLATE 2
TEKENING NR / DRAWING NR	MOX_5
SKAAL / SCALE	1:2
DATUM / DATE	2012/05/16

C:\Users\Marilize Everts\Documents\BIng (Meganies)\4eJaar\MOX410\Design Drawings\Evaporator\Evaporator Plate2 Last saved 30 May 2012 06:43:50 PM

VOLTOOI TITELBLOK IN SWART INK/COMPLETE TITLEBLOCK IN BLACK INK

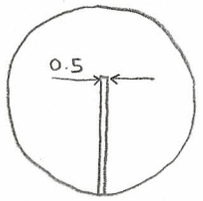

DETAIL A
SCALE 2:1

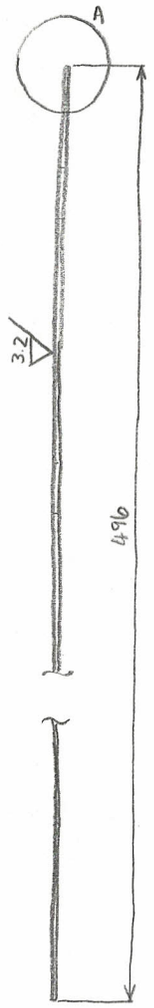

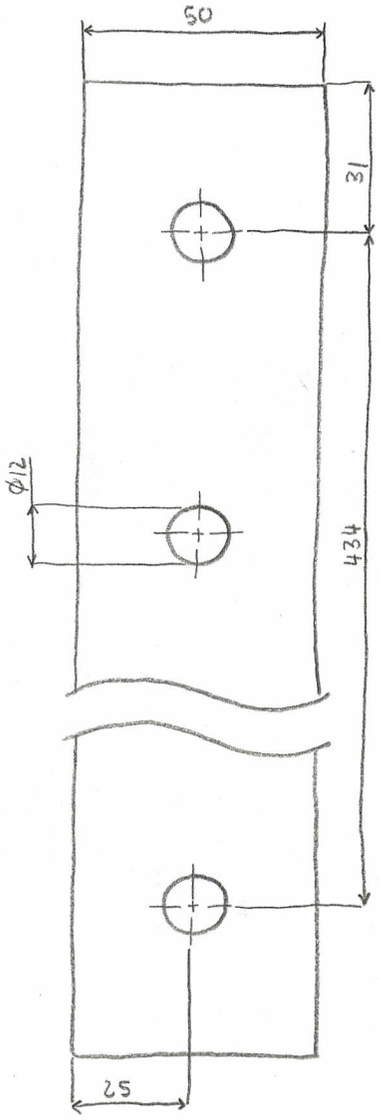

1. I understand what plagiarism is and am aware of the University's policy in this regard.
2. I declare that this drawing is my own original work.
3. I have not used another student's past work to hand in as my own.
4. I have not allowed, and will not allow, anyone to copy my work with the intention of passing it off as his or her own work.

TOLERANCES FROM - TO	+/-
0 - 6	0.1
6 - 30	0.2
30 - 100	0.3
100 - 300	0.5
300 - 1000	0.8
1000 - 3000	1.2
3000 - PLUS	2.0
ANGLES	1°

1	200	EVAPORATOR FIN	ALUMINIUM	1
ITEM NR / ITEM NO	AANTAL / QUANTITY	BESKRYWING / DESCRIPTION	MATERIAAL / MATERIAL	ONDERDEEL NR / PART NR
VAN / SURNAME: EVERTS		VOORLETTERS / INITIALS: M	TITEL / TITLE: EVAPORATOR FIN	
STUDENTE NO / STUDENTE NR: 29037078		RIGTING / DISCIPLINE: M	TEKENING NR / DRAWING NR: MOX_6	
PROJEKSIE / PROJECTION	UNIVERSITEIT VAN PRETORIA / UNIVERSITY OF PRETORIA	A3	SKAAL / SCALE: 1:2	DATUM / DATE: 2012/05/21

Draw1 Last saved 22 May 2012 08:23:54 AM

VOLTOOI TITELBLOK IN SWART INK/COMPLETE TITLEBLOCK IN BLACK INK

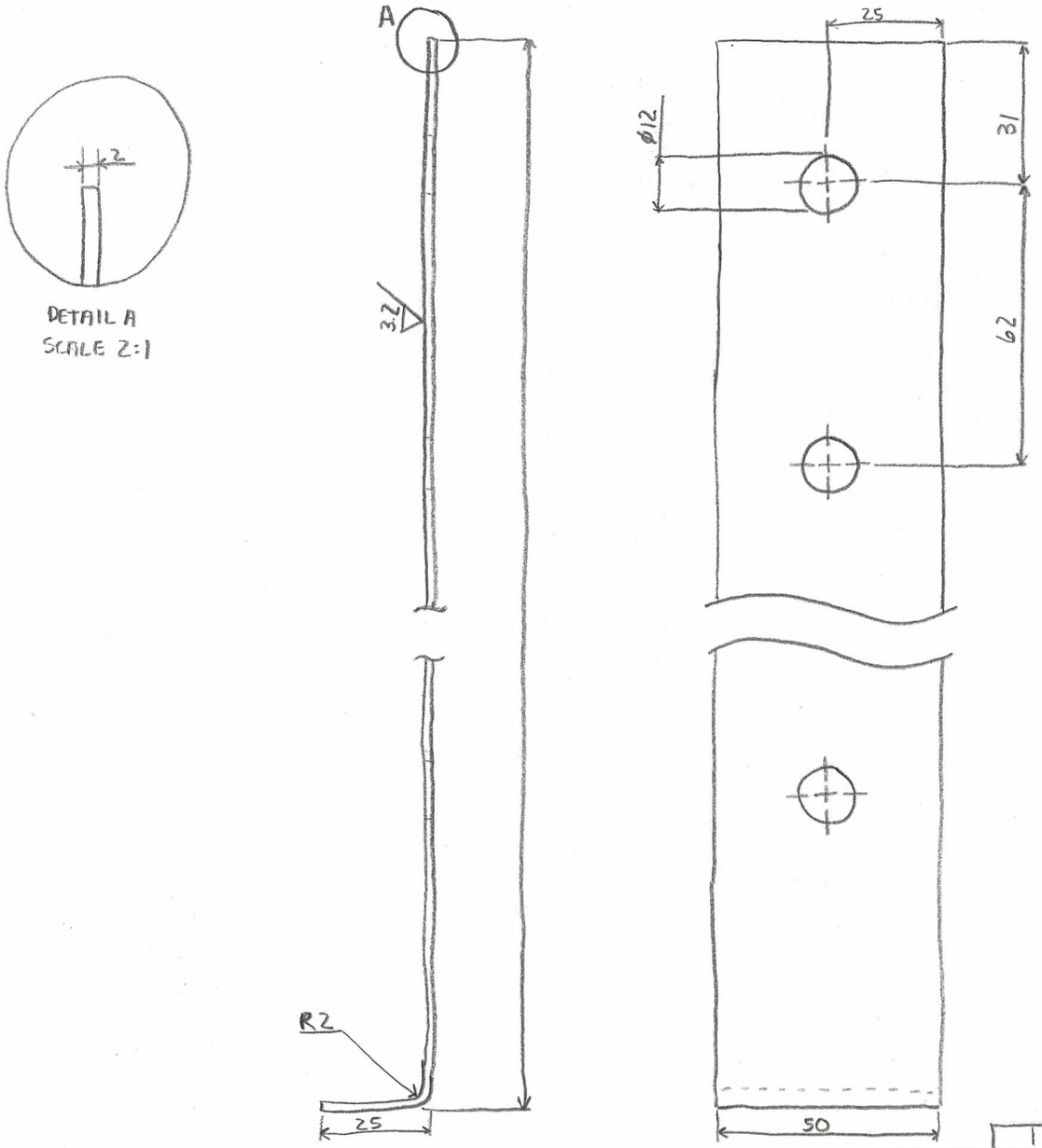

1. I understand what plagiarism is and am aware of the University's policy in this regard.
2. I declare that this drawing is my own original work.
3. I have not used another student's past work to hand in as my own.
4. I have not allowed, and will not allow, anyone to copy my work with the intention of passing it off as his or her own work.

TOLERANCES	
FROM - TO	+/-
0 - 6	0.1
6 - 30	0.2
30 - 100	0.3
100 - 300	0.5
300 - 1000	0.8
1000 - 3000	1.2
3000 - PLUS	2.0
ANGLES	1°

ITEM NR / ITEM NO	AANTAL / QUANTITY	BESKRYWING / DESCRIPTION	MATERIAAL / MATERIAL	ONDERDEEL NR / PART NR
1	1	EVAPORATOR PLATE 1	ALUMINIUM	1

VAN / SURNAME	EVERTS	VOORLETTERS / INITIALS	M
STUDENTE NO / STUDENTE NR	29037078	RIGTING / DISCIPLINE	M
PROJEKSIE / PROJECTION		UNIVERSITEIT VAN PRETORIA / UNIVERSITY OF PRETORIA	A3

TITEL / TITLE: EVAPORATOR PLATE 1
TEKENING NR / DRAWING NR: MOX_7
SKAAL / SCALE: 1:1
DATUM / DATE: 2012/05/21

Draw2 Last saved 22 May 2012 08:27:28 AM

VOLTOOI TITELBLOK IN SWART INK/COMPLETE TITLEBLOCK IN BLACK INK

9. MANUFACTURING ANALYSIS AND SCHEDULE

9.1 INTRODUCTION

Once the design has been finalized and approved, the manufacturing process should commence. Although there are various manufacturing methods, the most cost-effective option should be chosen in order to reduce the overall cost of the heat pump. Since the condenser and evaporator were the only two components that were designed in detail, the manufacturing methods of these two components will be discussed in this chapter.

9.2 CONDENSER

The condenser consists of a 12 mm copper tube which is placed inside a 22 mm copper tube. These tubes are coiled with a coil diameter of 40 cm. Half-hard Class 1 copper tubes will be used, since these tubes have excellent bending qualities.

The tubes are available in 5.5 m straight lengths, thus 4 tubes should be soft soldered together to obtain a total length of 22 m. Since the length of the condenser is specified to be 19.75 m, the tubes should then be cut to the desired length using a band saw.

FIGURE 9.1: CONDENSER

R134a will flow in the inner tube, while water will flow between the inner tube and the outer tube. Copper end plates with a hole for the inner tube connectors should be soft soldered at the ends of the tubes. A hole should be drilled at the top of the top end and on the side of the bottom end as shown in the condenser drawings in chapter 8, as well as in the figure on the right. The water pipes will be connected here.

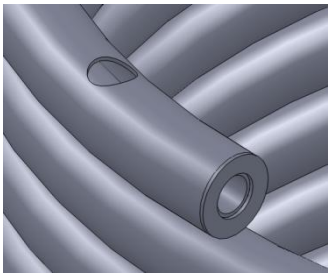

FIGURE 9.2: DETAIL OF CONDENSER

Resin core solder will be used with a low-heat flame (approximately 200°C). Before soldering, the surface should be prepared using flux.

9.3 EVAPORATOR

The evaporator consists of 200 aluminium sheets with a thickness, height and width of 0.5 mm, 496 mm and 30 mm, respectively. Two mild steel plates with similar dimensions will be attached to both ends to support the evaporator and to mount it to the base plate of the heat pump. Each aluminium plate and support will have eight 12 mm holes in order for the 12 mm copper tube to go through. The copper tube will consist of eight 0.5 m straight tubes connected with copper tube bends with a bend radius of 31 mm.

Since a large amount of aluminium sheets need to be cut for each heat pump, laser cutting will be used as it will save time while ensuring accurate end results. Although water jet cutting will

be a cheaper option, it will not be considered since the accuracy is significantly less than that of laser cutting. Accuracy is important for the evaporator fins since they will be press-fitted over the copper tubes. The holes for the tubes will also be cut during this process. Two end plates will be constructed from 2mm mild steel and will also be laser cut. These plates should be cold bent at one end to allow for mounting of the evaporator. This is shown in the manufacturing drawings in chapter 8.

The tubes will be assembled using two components: straight tube sections and curved tube sections. The eight 0.5 m tubes will fit through the holes in the evaporator plates as shown in the figure. The two thicker plates (2 mm) should be placed at the ends of the evaporator. The curved sections are cold bended to a radius of 31 mm. These are then soldered to the ends of the threaded straight sections in order to complete the evaporator. A soldering process similar to the one used to manufacture the condenser should be used.

9.4 FINAL ASSEMBLY

The heat pump will be assembled from the base plate upwards. The compressor should be mounted first, after which the mounting brackets for the fan and the divider plate can be attached. Next, the fan, condenser and evaporator can be fitted. This is followed by all the pipe connections, along with the pump and the suction accumulator. Lastly, the electrical unit and the cover should be attached.

9.5 CONCLUSION

The manufacturing process of the evaporator and condenser, as well as the assembly of the heat pump has been briefly discussed. When the manufacturing techniques were chosen, cost and accuracy were taken into consideration. A detailed breakdown of the costs involved is given in chapter 13.

10. MAINTENANCE ANALYSIS

10.1 INTRODUCTION

Heat pump maintenance is extremely important and if small problems are not addressed in time, it can lead to serious compressor problems. Therefore the basic maintenance of a heat pump will be discussed in this chapter.

10.2 MAINTENANCE TIPS

- Ice build-up
  Check for ice build-up, as this can be a serious warning sign. Ice build-up can mean that the coils are freezing or that refrigeration problems exist. It will be best to consult a professional if these problems occur.

- Sound
  Normal heat pumps have a soft hum of the refrigerant that is moving as well as the sound of the fan motor running. Unexpected banging or whining sounds are indications that there are problems with the system. The motor may also be starting to fail if it is running more noisily than usual.

- Drainage
  Draining lines are necessary to get rid of the excess water that is picked up from the air. If the drainage lines are blocked, the water will pool and damage the surrounding materials.

- Insulation
  The hot water pipes and condenser are insulated to prevent heat loss; therefore it is important to check the insulation for deterioration. This can be done by removing the top cover of the heat pump.

- Clean
  The casing should be cleaned from leaves and dirt. This can easily be done by removing the mesh from the framework. Ensure that the power of the unit is turned off before removing the mesh. The fan blades and casing can also be wiped with a general kitchen cleaner.

- Refrigerant
  The refrigerant charge should be measured annually and the tubes should also be inspected for leaks since the direct emission of the refrigerants is harmful to the environment. The compressor can also be inspected by removing the electrical unit from its supports. After disconnecting the necessary tubes, the compressor can be easily removed since it is bolted to the base plate.

- Electrical Unit
  The electric control unit and wiring should be inspected and checked for damage, since the functioning of the heat pump requires a working control system.

- Thermostat
  This can be inspected by measuring the outdoor and indoor temperatures, as well as the temperature of the heated water.

- Lubrication
  The fan motor should be lubricated properly.

- Professional Maintenance and Inspection
  Annual inspection and maintenance by a professional is strongly advised in order to ensure that no problems are overseen.

10.3 CONCLUSION

Regular maintenance will ensure that the heat pump operates efficiently, extend the life of the product and avoid expensive repairs. General maintenance can be done by the user, but it is strongly advised to consult the suppliers for an annual professional inspection.

11 . RELIABILITY ANALYSIS

11.1 INTRODUCTION

Reliability is the probability that a machine system and its components will operate without failure. (Budynas & Nisbett, 2008, pp. 240-241) It is crucial for the designer and manufacturer to know the reliability of the product. This chapter discusses the reliability of the heat pump.

11.2 RELIABILITY ANALYSIS

The reliability of the product can be expressed as follows:

$$R = 1 - \frac{failed\ components}{total\ components}$$

If none of the components fail, the reliability of the heat pump will be 100 %. However, if one of the components of the heat pump fails, the heat pump will not function properly. Each component needs to perform its function properly in order for the heat pump to operate successfully; therefore the product will fail if one component fails. The heat pump consists of 25 components when the fasteners and insulation material are neglected, therefore the reliability can be determined as follows:

$$\begin{aligned} R &= 1 - \frac{failed\ components}{total\ components} \\ &= 1 - \frac{1}{25} \\ &= 0.96 \end{aligned}$$

Therefore, the heat pump has a reliability of 96 %.

11.3 CONCLUSION

In order to do a reliability analysis, all the components of the heat pump have to be considered. This is important, since each component has to perform its specific function to ensure that the heat pump operates successfully. The reliability of the heat pump was calculated to be 96 % which is acceptable.

12 QUALIFICATION REQUIREMENTS

12.1 INTRODUCTION

The following requirements have been identified by Eskom in order to determine whether a heat pump will be successful, conforms to the necessary requirements, and will qualify for the Eskom Residential Heat Pump Rebate Program. These requirements will be used as a guideline to evaluate the domestic hot water heat pump.

12.2 SUPPLIER REQUIREMENTS

	Requirement	**Check**
1	The water tank is between 100 and 500 liters	✓
2	The noise level of the heat pump must not exceed 55 Db	✓
3	The condensate should be fed away from the unit via a durable and UV resistant pipe configuration	✓
4	Acoustic damping material must be used to avoid potential vibration transmission into noise, transferring to the heat pump and the house	✓
5	The outlet water temperature should be 55 °C	✓
6	Critical heat pump alarms should be audible and accepted by user via the control panel interface	✓
7	The warrantee of the heat pump should be 1 year, the compressor 5 years and the circulation pump 3 years	✓
8	The inlet and outlet lines of the heat pump must be configured with isolating valves	✓
9	The minimum average COP achieved over six temperature points is 2.8	✓
10	All electrical work should be undertaken by a licensed electrician with the Electrical Contractors Board and CoC must be issued.	✓

From the above table it follows that the heat pump conforms to the supplier requirements.

12.3 REFRIGERANT TYPES

The recommended refrigerants for heat pumps should be less corrosive, non-ozone layer depleting and environmentally friendly. These refrigerants include: HCF R-410a and R-407a, R7171, R744, R134a and R 600.

Since R134a is used as the working fluid in the heat pump, this requirement is also met.

12.4 PRODUCT INFORMATION

The following product information should be completed in order to verify the heat pump:

- Rated water temperature: 55°C
- Heating Capacity: 3.9 kW
- Refrigerant type: R134a
- Refrigerant charge: 0.0205 kg/s
- Frequency: 50 Hz
- Rated power input: 1.62 kW
- Rated current: 7.4 A
- Noise level: 55 dBA
- Water proof: Yes
- Weight: 70 kg
- Manufacture date: 2012/09/05[1]
- Serial number: MOX410EVERTS[1]
- Quality approved sticker: Yes
- Model: DHP1[1]

12.5 CONCLUSION

The Eskom qualification requirements for heat pumps are met, thus it can be concluded that the heat pump design is acceptable.

[1] For illustration purposes only

13 COST ANALYSIS

13.1 INTRODUCTION

This chapter contains the cost of the components, material and manufacturing of the heat pump as well as the estimated payback period. All prices include VAT and are based on internet or telephonic quotations. As the heat pump design is done for high volume manufacturing, the quoted costs are halved in order to obtain a realistic cost estimate.

13.2 COST ESTIMATES

The cost of the heat pump is divided into three main categories. These are cost of components, material costs, and labour costs. A breakdown of the costs is shown in the tables below.

TABLE 13.1: COST OF COMPONENTS

Description	Quantity	Unit Cost	Subtotal	Supplier
Compressor	1		10 260.00	Copeland Emerson
Water Pump	1		1 368.00	Kwikot
Fan	1		3 181.97	AMS Fans
Suction Accumulator	1		350.00	Heldon
Mounting Brackets	1		292.5	ITS-Solar
		Total	**15 159.97**	
		Discounted Total	**7 879.99**	

TABLE 13.2: MATERIAL COSTS

Description	Quantity	Unit Cost	Subtotal	Supplier
Aluminium Sheet	2	156	312.00	Stalcor
12 mm Copper Tube	1	328.88	1973.28	Copper Tubing Africa
22 mm Copper Tube	1	478	1912.01	Copper Tubing Africa
Capillary Tube	1/6	511.86	85.31	Metro Clark
12.5 mm Insulation	1	586.00	586.11	Kovco
10 mm Insulation	1	20.41	20.41	Kovco
1.6 mm Mild Steel	1	329.46	329.46	Genesis
5 mm Mild Steel	0.2	827.64	165.53	Genesis
Bolts, Washers and Nuts			35.00	Silverton Bolt and Nut
Rubber	0.1	150	15.00	Hawman & Hurly
		Total	**5 434.11**	
		Discounted Total	**2 717.06**	

TABLE 13.3: LABOUR COSTS

Description	Hours	Tariff	Subtotal	Company
Laser Cutting	1		4560	National Laser Centre
Bending and soldering	1		400	Niagra Air
Assembly	2	380	760	
		Total	**5 720**	
		Discounted Total	**2 860**	

TABLE 13.4: TOTAL COSTS

Description	Cost
Components	7 880
Material	2 717
Labour	2 860
Subtotal	**13 457**
Profit	13 457
Eskom Rebate	-3 688
Grand Total	**23 226**

13.3 PAYBACK PERIOD

To determine the payback period of the heat pump, it was assumed that an average household of four people spends R1 200 per month on their electricity account. Furthermore, it was assumed that water heating represents 40 % of the account and the electricity tariff is R1.05/kWh. The COP of the heat pump is 3, therefore 67 % of the water heating cost will be saved.

	Electricity cost per month	**Water heating cost (40% of total cost)**	**Heat pump savings (67% of water heating cost)**	**Estimated savings per year**	**Energy saving per month [kWh]**	**Energy saving per year [kWh]**
Year 1 (Assume electricity tariff of R1.05/kWh)	R1 200	R480	R322	R3 859	192	2304
Year 2 (Assume 24.8% price increase)	R1 498	R599	R401	R4 816	192	2304
Year 3 (Assume 25.8% price increase)	R1 884	R754	R505	R6 062	192	2304
Year 4 (Assume 26.8% price increase)	R2 389	R956	R641	R7 686	192	2304
Year 5 (Assume 27.8% price increase)	R3 053	R1 221	R818	R9 819	192	2304

13.4 CONCLUSION

The total cost of the heat pump is estimated to be R13 457 and when accounting for profit, as well as the Eskom rebate, users will have to pay R23 226 for the heat pump. The payback period is estimated to be between 4 and 5 years, which are significantly longer than the usual 3 years. However, as mentioned before, this is only a first order design, and the cost of the heat pump and therefore the payback period, can still be reduced once the heat pump is optimized.

14 SAFETY AND ENVIRONMENTAL IMPACT

14.1 INTRODUCTION

The safety and environmental impact of products and design have become an important parameter to determine the success of a product. This chapter investigates the safety and environmental impact of the domestic hot water heat pump.

14.2 SAFETY OF HEAT PUMP

All the components of the heat pump are safely covered in a powder-coated mild steel casing that is suitable for all weather conditions and will provide maximum corrosion resistance. The heat pump unit is also easy to install and will use the existing geyser as the water tank, thus there will be no extra tanks or panels installed on the roof causing extra weight. This is an important aspect since various roofs are not built to support extra weight.

The fan blades are covered with a wire mesh to prevent leaves, or fingers, to enter the heat pump while operating.

The water heated by the heat pump will reach a maximum of 55 °C, thus the risks of burns in showers are eliminated.

14.3 ENVIRONMENTAL IMPACT

The environmental impact evaluation takes into account the indirect emissions related to the electricity generation in order to operate the heat pump, the refrigerants and the bio-degradability of the components.

14.3.1 ENERGY SOURCE AND EFFICIENCY

The efficiency and COP may be even more important than the type of refrigerant used, since this is directly related to the environmental impact of energy generation. The COP of 3 of the heat pump ensures that less energy is required for operation than is supplied as heating. Since electricity demand is lowered, the demand for fossil fuels is also lowered. This is especially a major factor in South Africa since most power stations are coal fired.

There is no combustible gas burnt off during the heating process, thus it will reduce the carbon footprint of the house. Heat pumps are internationally recognised as eco-friendly, since they lower the greenhouse gas emissions by between 200 and 400 %. (Eskom, 2010)

This heat pump uses ambient air as the heat source due to its unlimited availability. The installation is quick and uncomplicated compared to ground source heat pumps since no pipes have to be buried underground.

Sufficient insulation has also been provided to minimise the heat loss to the surroundings and improve the efficiency. The electrical energy input has therefore also been minimised.

14.3.2 REFRIGERANTS

Although hydroflourocarbons (HFC) refrigerants have zero ozone depletion (ODP) they should be used with care since it still contributes to global warming. Direct emissions due to leakage should also be minimised, thus regular maintenance and checks should be performed on the system. R134a has been used as the working fluid in the heat pump and is also one of the recommended refrigerants in South Africa. (Eskom, n.d.)

14.3.3 ENVIRONMENATALLY FRIENDLY COMPONENTS

Although the electrical unit has not been designed in this project, it should conform to the RoHS-standard (Restriction of the Use of Certain Hazardous Substances in Electrical and Electronic Equipment). (National Measurement Office, 2005). Various bio-degradable materials, such as mild steel and copper, are used in the construction of the heat pump.

14.4 CONCLUSION

The safety and environmental impact of the heat pump has been investigated and it can be concluded that the product is safe and environmentally friendly.

15 CONCLUSION AND RECOMMENDATIONS

The purpose of this project was to design a domestic hot water heat pump.

A detailed literature study was conducted on heat pumps and their main components, heat exchanger types, as well as refrigerants. A feasibility study proved that a heat pump is indeed an attractive solution.

After the functional analysis and list of user and design requirements, various concepts for the condenser and evaporator have been generated and evaluated. This was followed by a detail design since these two components were designed from first principles. A scroll compressor, centrifugal circulating water pump, fan, capillary tube expansion valve and suction accumulator were scientifically selected.

The helically coiled tubular condenser and plate-and-fin evaporator were modeled on Solidworks. A compilation drawing of the heat pump was made, as well as detailed manufacturing drawings and free hand sketches of the evaporator.

A basic manufacturing and cost analysis was done and the safety and environmental impact was also investigated to determine the success of the product. The total cost of the product was estimated to be R23 000 with a payback period of approximately four years. A COP of 3 was achieved with the current design. However, it should be noted that this is only a first order design, thus the heat pump as a whole can further be optimized to improve its efficiency and size.

The average COP of the heat pump can be improved by designing for a 10°C temperature difference in the water, as opposed to the constant condensing temperature of 60°C used in this design. This will account for the effect of the rising water temperature on the COP. The cost and payback period should be improved when the design is optimized.

Overall, the design met the required specifications with the exception of weight and cost. Although this can be improved in the next iteration of the design, the current weight and cost is acceptable for a first order design.

Airconditioning-Systems.com, 2011. *R134a Refrigerant.* [Online]. Available: http://www.airconditioning-systems.com/R134a.html [2012, March 2].

ASHRAE. 2010. *2010 ASHRAE Handbook - Refrigeration,* Chapter 11. Atlanta: American Society of Heating, Refrigeration and Airconditioning Engineers, Inc..

Bahrami, M., n.d. *Refrigeration Cycles.* [Online]. Available: http://www.sfu.ca/~mbahrami/ENSC%20461/Notes/Refrigeration%20Cycle.pdf [2012, April 7].

Bartlett, D. A., 1996. Fundamentals of Heat Exchangers. *The Industrial Physicist*, pp. 18-21.

Budynas, R. & Nisbett, J., 2008. *Shigley's Mechanical Engineering Design.* 8th ed. Singapore: McGraw-Hill.

Cengel, Y., 2006. *Heat and Mass Transer: A Practicla Approach.* 3rd ed. Singapore: McGrawHll.

Copper Tubing Africa, 2012. *Product Catalogue.* [Online]. Available: http://www.coppertubing.co.za/catalogue_product_listing.asp [2012, May 4].

Engineers Edge, n.d. *Comparison of Heat Exchangers.* [Online] Available: http://www.engineersedge.com/heat_exchanger/Camparison_heat_exchanger_types.htm [2012, April 8].

Eskom, 2010. *Heat Pumps.* [Online]. Available: http://www.eskomidm.co.za/heat-pumps [2012, April 7].

Eskom, 2010. *The Benefits of Heat Pumps.* [Online]. Available: http://www.eskomidm.co.za/agricultural/agricultural-technologies/the-benefits-of-heat-pumps [2012, May 19].

Eskom, 2011. *Eskom Holdings Limited Integrated Report,* s.l.: s.n.

Eskom, n.d. *Residential Heat Pump Rebate Programme.* [Online]. Available: http://www.eskomidm.co.za/docs/specifications_for_heat_pumps_on_rebate_programme.pdf [Accessed 18 May 2012].

FireFly Heat Pumps, 2011. *Why is R410A refrigerant better than others.* [Online]. Available: http://heatpumps.greenisenergyefficient.com/why-is-410a-refrigerant-better-than-other-refrigerants/ [2012, March 2].

Hanyang Alcobis co., ltd, 2008. *Technical Report for Evaporators.* [Online]. Available: http://hanyung.co.kr/technicalreport.pdf [2012, April 9].

Heat Pump Association, n.d. *Heat Pump Association.* [Online]. Available: http://www.heatpumps.org.uk/HowDoesAHeatPumpWork.htm [2012, March 2].

Heldon, 2009. *Suction Accumulators.* [Online]. Available at: http://www.heldon.com.au/getattachment/6168cc2c-4872-4f0d-a6d3-ff5dec8fd022/Accumulators.aspx [2012, May 15].

HRS Heat Exchangers, 2012. *Corrugated tube heat exchangers.* [Online]. Available: http://www.hrs-heatexchangers.com/en/products/components/corrugated-tube-heat-exchangers/default.aspx [2012, April 8].

HRS Heat exchangers, 2012. *HRS AS Series: Annular space corrugated tube heat exchanger.* [Online]. Available: http://www.hrs-heatexchangers.com/en/products/components/corrugated-tube-heat-exchangers/hrs-as-series/default.aspx [2012, April 8].

HRS Heat Exchangers, 2012. *HRS DTI Series: Industrial double tube heat exchanger.* [Online]. Available: http://www.hrs-heatexchangers.com/en/products/components/corrugated-tube-heat-exchangers/hrs-dti-series/default.aspx [2012, April 8].

HRS Heat Exchangers, 2012. *HRS K Series: Industrial multitube heat exchanger.* [Online]. Available: http://www.hrs-heatexchangers.com/en/products/components/corrugated-tube-heat-exchangers/hrs-k-series/default.aspx [2012, April 8].

HubPages, 2012. *Advantages and disadvantages of Shell and Tube & Plate type Heat Exchangers.* [Online]. Available at: http://www.marineengineering.com [2012, March 21].

Kanizawa, F., Hernandes, R., De Moraes, A. & Ribatski, G., 2011. A New Correlation for Single and Two-Phase Flow Pressure Drop In Round Tubes with Twisted-Tape Inserts. *Journal of the Brazilian Society of Mechanical Science and Engineering,* XXXIII(Special Issue), pp. 243-250.

Kedzierski, M., Chato, J. & Rabas, T., 2003. Condensation. In: *Heat Transfer Handbook.* s.l.:John Whiley & Sons, pp. 719-796.

Khemani, H., 2010. *Tyoes of Refrigerant Evaporators.* [Online]. Available at: http://www.brighthub.com/engineering/mechanical/articles/61270.aspx [2012, April 9].

Kolmetz, K., 2011. KLM Technology Group Compressor Selection (Engineering Design Guideline). pp. 1-65.

Kumar, V., Saini, S., Sharma, M. & Nigam, K., 2006. Pressure drop and heat transfer study in tube-in-tube helical heat exchanger. *Chemical Engineering Science,* Issue 61, pp. 4403-4416.

Maksal, 2009. *Refrigeration tubes: Capillary tubes for restrictor appl.* [Online]. Available: http://www.maksal.com/RefTubes3.aspx [2012, May 4].

MasterTherm, 2006. *Electronic Expansion Valve.* [Online]. Available: http://www.mastertherm.co.uk/catalog-and-prices/electronic-expansion-valve [2012, April 6].

Meyer, J. & Greyvenstein, G., 1991. Hot Water for Homes in South Africa with Heat Pumps. *Energy,* 16(7), pp. 1039-1044.

Meyer, J. & Greyvenstein, G., 1992. Influence of Price Changes on the Viability of Heat Pumps for Heating Water in South African Homes. *Energy Conversion and Management,* 33(1), pp. 41-49.

National Measurement Office, 2005. *What is RoHS?.* [Online]. Available: http://www.bis.gov.uk/nmo/enforcement/rohs-home [2012, May 22].

North West University, 2012. *Heat Pumps and Alternate Energy Systems.* [Online]. Available: http://www.geoplus.co.za/index.php/the-news/45-an-investigation-into-the-energy-savings-and-economic-viability.html [2012, March 3].

Olivier, J., Liebenberg, L., Thome, R. & Meyer, J., 2007. Heat transfer, pressure drop, and flow pattern recognition during condensation inside smooth, helical micro-fin, and herringbone tubes. *International Journal of Refrigeration,* Volume 30, pp. 609-623.

SA Explorer, 2011. *Pretoria Climate.* [Online]. Available: http://www.saexplorer.co.za/south-africa/climate/pretoria_climate.asp [2012, May 26].

Simons, R., 2003. *Estimating Parallel Plate-fin Heat Sink Pressure Drop.* [Online]. Available: http://www.electronics-cooling.com/2003/05/estimating-parallel-plate-fin-heat-sink-pressure-drop/ [2012, May 10].

South African Institute of Steel Construction, 2010. *The Red Book.* 7th ed. Cape Town: South African Institute of Steel Construction.

Standards South Africa, 2005. *SANS 10162-1:2005.* Pretoria: Standards South Africa.

Suliman, R., Liebenberg, L. & Meyer, J., 2009. Improved flow pattern map for accurate prediction of the heat transfer coeeficients for condensation of R134-a in smooth horizontal tubes and within the los mass flux range. *International Journal of Heat and Mass Transfer,* Volume 52, pp. 5701-5711.

APPENDIX A: MATLAB CODES

CONDENSER OPTIMISER

EVAPORATOR INVESTIGATION

EVAPORATOR OPTIMIZATION

APPENDIX B: PRODUCT SPECIFICATIONS

1. **COMPRESSOR**
2. **FAN**
3. **SUCTION ACCUMULATOR**
4. **WATER PUMP**

RATING CONDITIONS
5.6 K Superheat
3.9 K Subcooling
35 C Ambient Air Over

50 Hz Operation

HEAT PUMP

ZH15K4E-TFD
HFC-134A
COPELAND SCROLL®
TFD 380/420-3-50

Evaporating Temperature C (Sat Dew Pt Pressure, bar)

Condensing Temperature C (Sat Dew Pt Pressure, bar)		-25(1.1)	-20(1.3)	-15(1.6)	-10(2)	-5(2.4)	0(2.9)	5(3.5)	10(4.1)	15(4.9)
70 (21)	C				1275	1655	2095	2605	3200	3900
	P				1500	1600	1690	1780	1870	1970
	A				2.7	2.9	3	3	3.1	3.2
	M				13	16.3	20	24.2	28.9	34.1
	E				0.9	1	1.2	1.5	1.7	2
	%				43.6	47.1	49.9	52	53.3	53.6
60 (17)	C		910	1220	1575	2000	2490	3050	3750	4500
	P		1150	1210	1280	1340	1410	1480	1550	1640
	A		2.4	2.5	2.6	2.7	2.7	2.7	2.8	2.9
	M		8.3	10.8	13.7	16.9	20.5	24.7	29.3	34.6
	E		0.8	1	1.2	1.5	1.8	2.1	2.4	2.8
	%		39.7	44.5	48.6	52	54.4	55.9	56.2	55.3
55 (15)	C	735	1010	1330	1710	2155	2675	3300	4000	4800
	P	1000	1060	1120	1170	1230	1280	1350	1420	1510
	A	2.3	2.4	2.5	2.5	2.6	2.6	2.6	2.7	2.8
	M	6.5	8.6	11.1	13.9	17	20.7	24.8	29.5	34.8
	E	0.7	1	1.2	1.5	1.8	2.1	2.4	2.8	3.2
	%	36.6	42.1	46.9	50.9	54	56.1	57	56.6	54.7
50 (13)	C	815	1100	1435	1830	2300	2855	3500	4250	5100
	P	933	980	1020	1070	1120	1170	1240	1310	1400
	A	2.3	2.4	2.4	2.4	2.5	2.5	2.5	2.6	2.7
	M	6.7	8.8	11.2	14	17.2	20.8	25	29.7	35
	E	0.9	1.1	1.4	1.7	2.1	2.4	2.8	3.2	3.6
	%	39	44.3	49	52.8	55.5	57	57.1	55.7	52.6
45 (12)	C	885	1180	1535	1955	2450	3050	3700	4500	5400
	P	860	899	938	981	1030	1090	1150	1230	1330
	A	2.2	2.3	2.3	2.3	2.4	2.4	2.5	2.6	2.7
	M	6.9	9	11.4	14.1	17.3	21	25.1	29.8	35.2
	E	1	1.3	1.6	2	2.4	2.8	3.2	3.6	4.1
	%	41.1	46.3	50.7	54.1	56.2	56.9	55.8	53.1	48.7
40 (10)	C	955	1265	1635	2075	2600	3200	3950	4750	5700
	P	790	825	863	906	957	1020	1090	1180	1290
	A	2.2	2.2	2.3	2.3	2.3	2.4	2.5	2.6	2.8
	M	7	9.1	11.5	14.2	17.4	21.1	25.3	30.1	35.4
	E	1.2	1.5	1.9	2.3	2.7	3.2	3.6	4	4.4
	%	43.1	48	51.9	54.6	55.7	55.1	52.8	48.6	42.8
35 (9)	C	1025	1345	1735	2200	2755	3400	4150	5050	
	P	726	761	801	849	907	977	1060	1170	
	A	2.1	2.2	2.2	2.3	2.3	2.4	2.5	2.7	
	M	7.2	9.2	11.6	14.4	17.6	21.3	25.5	30.4	
	E	1.4	1.8	2.2	2.6	3	3.5	3.9	4.3	
	%	44.7	49.1	52.2	53.7	53.6	51.6	47.7	42.2	
30 (8)	C	1100	1435	1845	2335	2900	3600	4400		
	P	671	711	757	813	882	966	1070		
	A	2.1	2.2	2.2	2.3	2.4	2.5	2.7		
	M	7.3	9.3	11.7	14.5	17.8	21.5	25.8		
	E	1.6	2	2.4	2.9	3.3	3.7	4.1		
	%	45.9	49.2	51.1	51.3	49.5	46	40.7		
20 (6)	C	1280	1650	2100	2645	3300	4050			
	P	604	664	736	821	924	1050			
	A	2.1	2.2	2.4	2.5	2.7	2.9			
	M	7.7	9.8	12.2	15.1	18.5	22.3			
	E	2.1	2.5	2.9	3.2	3.6	3.9			
	%	45.3	45.5	44	40.9	36.2	30.3			

Nominal Performance Values (±5%) based on 72 hours run-in. Subject to change without notice. Current @ 400 V

C:Capacity(Watts), P:Power(W), A:Current(Amps), M:Mass Flow(g/s), E:COP(W/W), %:Isentropic Efficiency(%)

Autogenerated Compressor Performance

1.43HP50-04-1749-TFD
Printed 04/17/2012
04-1749

ZH15K4E-TFD

HFC, R-134a, 50Hz, 3- Phase, 380/420 V
Heat Pump Optimized

Production Status: Non U.S. model with restricted sales - Contact your Emerson Climate Technologies Representative.

Performance

Evap(°C)/Cond(°C)	-6.7 / 35.0	-6.7 / 50.0
RG(°C)/Liq(°C)	-1.1 / 31.1	-1.1 / 46.1
Capacity (Watts)	2560	2135
Power (Watts):	886	1100
Current (Amps):	2.30	2.40
EER (COP):	2.90	1.93
Mass Flow (g/s):	16	16
Sound Power (dBA):	71 Avg	76 Max
Vibration (mm(peak-	0.051 Avg	0.076 Max
Record Date:	2004-09-23	

Mechanical

Number of Cylinders:	0	Displ(cm^3/Rev):	34.03
Bore Size(mm):	0.00	Displ(meters^3/hr):	5.92
Stroke(mm):	0.00		
Overall Length (mm):	241.3	Mounting Length (mm):	190.50
Overall Width (mm):	241.3	Mounting Width (mm):	190.50
Overall Height (mm):	363.7	Mounting Height (mm):	396.4 *

Suction Size (mm):	19 1/16 Stub
Discharge Size (mm):	12 11/16 Stub
Oil Recharge (ml):	1183
Initial Oil Charge (ml):	1301
Net Weight (kg):	25.85
Internal Free Volume (cm^3):	4113.89
Horse Power:	

*Overall compressor height on Copeland Brand Product's specified mounting grommets.

Electrical

LRA-High*:	26.0	MCC (Amps):	6.0	UL File No:
LRA-Half Winding:		RPM:		UL File Date:
LRA Low*:	24.5	Max Operating Current:	5.0	
RLA(=MCC/1.4;use for contactor selection):		4.3		
RLA(=MCC/1.56;use for breaker & wire size		3.8		

*Low and High refer to the low and high nominal voltage ranges for which the motor is approved.

Alternate Applications

Refrigerant	Freq (Hz)	Phase	Voltage	Application
R-134a HFC	60	3	460	
R-407C HFC	60	3	460	
R-407C HFC	50	3	380/420	Heat Pump Optimized

MOTOR TYPE (3)	ØE PIN CIRCLE
PFJ PFV TF5 TFR	13.46 [0.530]
TFD TFE	17.45 [0.687]

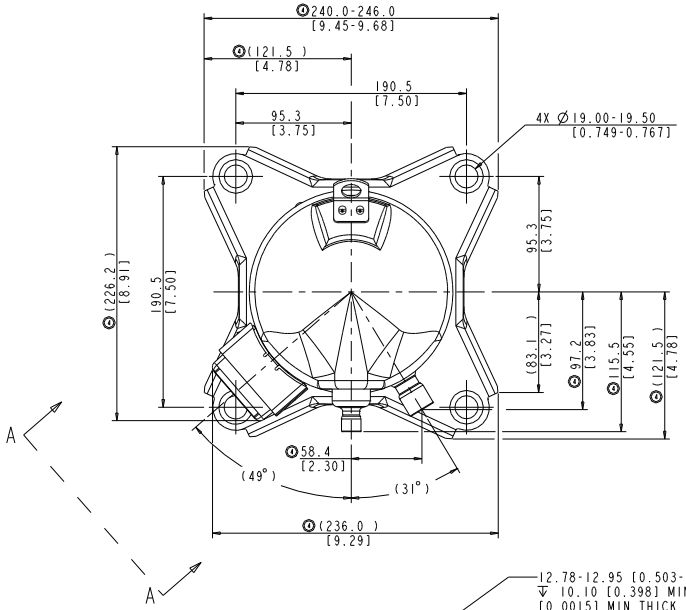

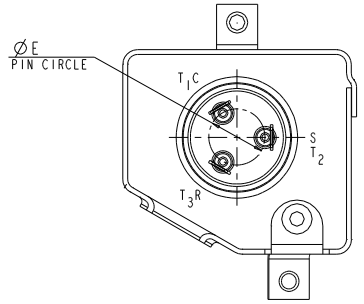

VIEW A-A
TERMINAL BOX LAYOUT OPTIONS
SCALE 2:1

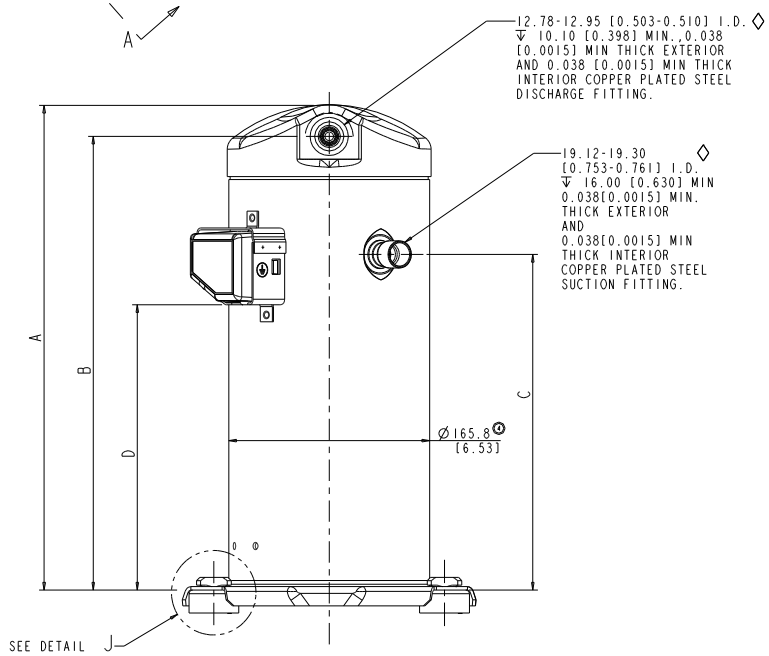

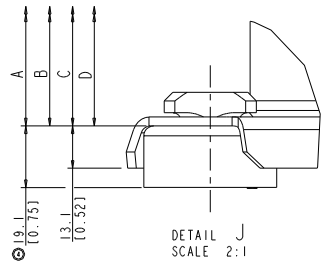

DETAIL J
SCALE 2:1

ECN000990	6	ADDED CPC & 'TFR'	02-03-09	JYU	BG	VC
32-0906-047	5	CHANGED FORMAT FOR PROJECT INC	03-05-07	SVK	CHK	RST
32-0105-057	4	REDRAWN AND REVISED	07-08-04	NMD	DC	DC
32-1001-009	0	RELEASED	10-11-01	DES	CHK	JP
ENG NOTICE NO.	REV.NO.	REVISIONS	DATE	BY	CHKD	APPR

EMERSON Climate Technologies

Copeland brand

INTERPRET PER ASME Y14.5M-1994 AND EMERSON CLIMATE TECHNOLOGIES, INC. DESIGN STANDARDS DS2002
DO NOT SCALE DRAWING
THIRD ANGLE PROJECTION

UNLESS OTHERWISE SPECIFIED DIMENSIONS ARE MILLIMETER OR [INCH]
TOLERANCES:
1-PLACE ±
2-PLACE ± (1)
ANGULAR ± N/A

CONFIDENTIALITY NOTICE
10
THIS DRAWING AND INFORMATION CONTAINED HEREIN ARE THE EXCLUSIVE PROPERTY OF EMERSON CLIMATE TECHNOLOGIES, INC. AND SHALL BE RETURNED UPON DEMAND AND SHALL NOT BE REPRODUCED IN WHOLE OR IN PART, DISCLOSED TO ANYONE ELSE OR USED, WITHOUT THE WRITTEN CONSENT OF EMERSON CLIMATE TECHNOLOGIES, INC.

MATERIAL SPECIFICATION: N/A
DRAWN BY: OTL
DATE: 03-05-07
SUPERSEDES DWG. NO. / REV. NO.: /
SCALE: 3:4
DATE FORMAT: MM-DD-YY
TITLE: REF DWG-WELD COMP ASSM
DRAWING NUMBER: 497-0368-00
SHEET 2 OF 2
REV: 5

Features

All CFP plate mounted axial fans include a one piece bellmouth mounting plate. The motor and fan impeller are supported within this mounting plate by a strong electrowelded steel support frame. All models also include a steel finger proof guard, ISO 13582, as standard mounted to the inlet side of the fan as well as condensation drain holes.

There are 8 standard sizes from 250 to 630mm, all fully speed controllable and can operate up to 95% humidity.

The fans produce air volume flow rates of up to 4,2m³/s and can handle static pressure up to 200Pa.

Motors

All CFP plate mounted Sickle Blade Axial fans incorporate asynchronous induction type motors with squirrel cage external rotors.

The sealed for life ball bearings can be operated at any angle.

The motors are protected to IP54 with Class F insulation, suitable for operating temperatures up to 55°C with thermal overload protection on the single phase.

Two, four and six pole motors are available.

Suggested Specifications

All performances are based upon BS848 Part 2:1985 for sound and ISO5801:1997 for airflow.

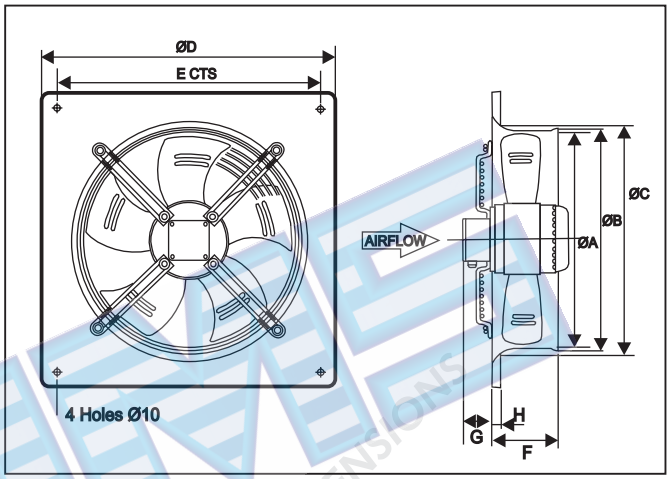

Model..	ØA	ØB	ØC	ØD	E	F	G	H	kg
200	200	210	215	315	260	50	60	15	2
250	250	260	265	370	320	90	60	15	3
350	350	360	395	485	435	90	60	15	4.9
400	400	410	450	540	490	110	60	15	7.2
450	450	460	500	575	535	110	60	15	7.2
500	500	510	560	655	615	115	60	15	9.5
630	630	645	705	805	750	125	60	20	15
710	710	720	740	850	810	130	140	25	37.5

Ancillaries

PER-W
Plastic louvre shutters

WALL COWL

See Section H-Ancillaries for further details.

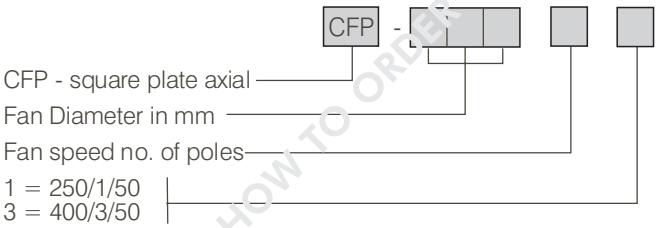

CFP SERIES Plate mounted

Model..	m³s@Pa 0	25	50	75	100	125	150	175	200	V	r/min	FLC Amps	SC Amps	Input Power W	dBA@ 3m	kg
200/2-1	0.175	0.162	0.142	0.095	0.062	0.032	0.014			240/1/150	2400	0.26	0.8	60	41	2.5
250/2-1	0.354	0.326	0.258	0.168	0.142	0.121	0.101	0.081	0.056	240/1/150	2600	0.4	1.2	90	51	3
315/2-1	0.547	0.503	0.451	0.370	0.259	0.164				240/1/150	2400	0.75	2.3	170	51	3.3
315/4-1	0.423	0.370	0.203	0.162	0.128	0.088	0.016			240/1/150	1370	0.35	1.1	80	49	3.3
350/4-1	0.726	0.672	0.582	0.437	0.322	0.240	0.169	0.096		240/1/150	1400	0.7	2.1	150	53	4.9
350/4-3	0.716	0.662	0.574	0.431	0.317	0.237	0.167	0.095		400/3/50	1380	0.38	1.1	140	53	4.9
400/4-1	1.083	0.983	0.874	0.613	0.435	0.311	0.124			240/1/150	1380	0.82	2.5	180	59	7.2
400/4-3	1.083	0.983	0.874	0.613	0.435	0.311	0.124			400/3/150	1380	0.47	1.6	180	59	7.2
450/4-1	1.365	1.245	1.134	0.971	.0641	0.417	0.182			240/1/150	1350	1.1	3.3	250	59	7.2
450/4-3	1.375	1.254	1.142	0.978	0.646	0.420	0.183			400/3/150	1360	0.6	1.84	250	59	7.2
500/4-1	1.871	1.767	1.648	1.497	1.278	0.979	0.761	0.588		240/1/150	1370	1.55	4.7	350	63	9.5
500/4-3	1.803	1.703	1.588	1.442	1.231	0.943	0.733	0.567		400/3/150	1320	0.9	2.65	350	61	9.5
630/4-3	0.000	0.000	0.000	0.000	0.000	0.000	0.000			400/3/150	1370	1.45	2.8	770	78	15
630/6-3	2.916	2.651	2.342	1.949	1.512	1.140	0.828	0.530		400/3/150	900	1.56	4.7	600	66	15
710/68-3	4.130	3.929	3.693	3.400	3.001	2.399	1.768	1.342	1.011	400/3/150	900	1.75	5.3	900	71	37.5
710/8pole	3.0975	2.94675	2.76975	2.55	2.25075	1.79925	1.326	1.0065		400/3/150	730	1.15	2.47	650	58	37.5

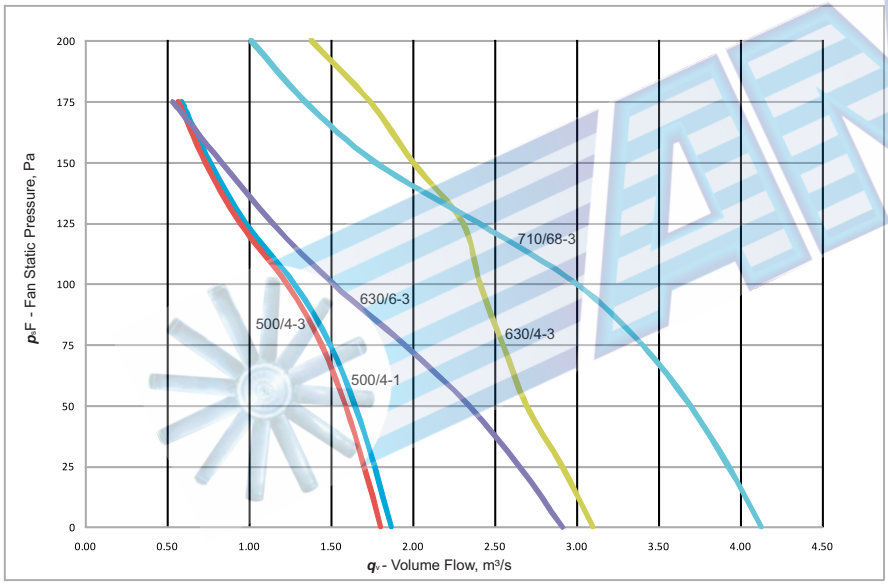

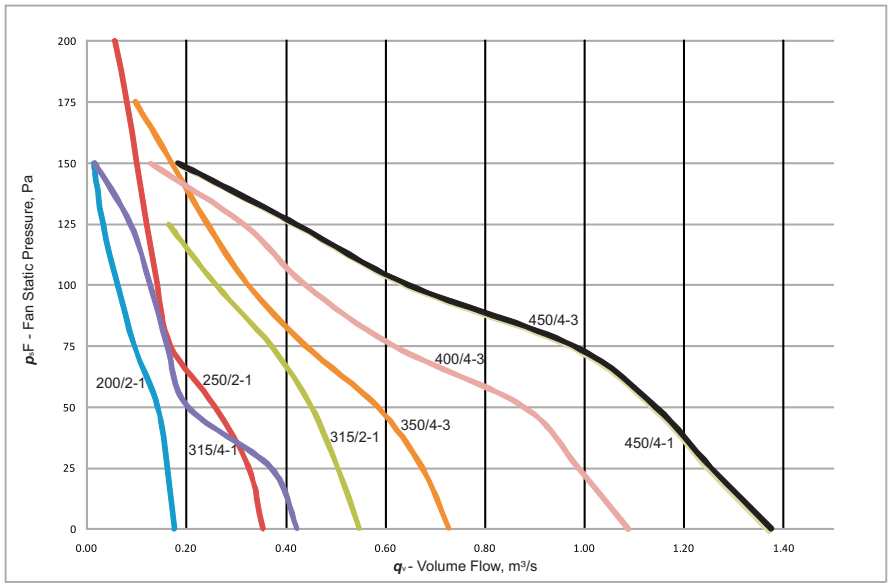

Recommended system practices for Halocarbon refrigerants according to the ASHRAE Handbook R02 – Refrigeration, take into consideration economic factors such as costs of materials and system efficiency. Pressure drop calculations for each segment of the system are based on change in saturation temperature of the refrigerant; in suction lines the total drop should be limited to 1 K in equivalent pressure loss.

A Worked Example

The standard range of Heldon accumulators have been sized to ensure no more than a ½ K temperature loss across them when they are within the Max kW ratings as called out on the table.
In order to select the correct model the following conditions should be established:

Determine the Evaporating Temperature (°C)
Type of Refrigerant used (e.g. R404A)
The total cooling load (kW)
Trapping Capacity (kg) of Refrigerant at -15 C

Data from the following chart may then be used to select;

Heldon New Part Number	Connection Size	Trapping Capacity kg	kW of Refrigeration (Max) R134a -10 C	R134a -5 C	R134a 0 C	R404A/R507 -40 C	R404A/R507 -20 C	R404A/R507 -5 C	R22 -40 C	R22 -20 C	R22 -5 C	R407C -20 C	R407C -5 C	R407C 5 C
3100-084010A	1/2" ODS	0.9	2.2	2.6	3.2	1.0	2.3	4.1	1.1	2.6	4.4	2.3	4.1	6.0
3100-104010A	5/8" ODS	0.9	4.1	5.0	6.1	1.8	4.4	7.9	2.1	5.0	8.5	4.3	7.9	11.3
3100-104017A	5/8" ODS	1.53	4.1	5.0	6.1	1.8	4.4	7.9	2.1	5.0	8.5	4.3	7.9	11.3
3100-124017A	3/4" ODS	1.53	11.8	14.3	17.2	4.0	9.4	16.2	6.5	14.5	24.1	7.9	16.7	23.4
3100-125024A	3/4" ODS	2.17	11.8	14.3	17.2	4.0	9.4	16.2	6.5	14.5	24.1	7.9	16.7	23.4
3100-145024A	7/8" ODS	2.17	12.6	15.5	18.8	5.5	13.6	24.0	6.5	15.2	26.1	13.3	24.2	34.7
3100-145040A	7/8" ODS	3.4	12.6	15.5	18.8	5.5	13.6	24.0	6.5	15.2	26.1	13.3	24.2	34.7
3100-185048A	1-1/8" ODS	4.3	25.0	30.5	37.1	11.0	26.8	47.5	13.0	30.2	51.5	26.3	47.8	68.3
3100-225048A	1-3/8" ODS	4.3	45.8	56.0	69.5	20.1	32.1	86.8	23.8	55.5	94.5	48.3	87.5	125.0
3100-266011A	1-5/8" ODS	10	76.0	93.0	113.0	33.4	81.5	143.6	39.7	92.3	160.0	80.0	145.1	206.8

Example:

Heldon New Part Number	Trapping Capacity kg	kW of Refrigeration (Max) R404A/R507 -40 C	-20 C	-5 C	
3100-145040A	3.4	5.5	13.6	24.0	Too Low
3100-185048A	4.3	11.0	26.8	47.5	
3100-225048A	4.3	20.1	32.1	86.8	Too High

Temperature

Selection

Capacity

1 For an R404A system at 30 kW duty, evaporating at -5 C and condensing at 40 C, follow the data for R404A/R507, select the nearest higher capacity for the system, in this case 47.5 kW

2 Next read across to the model designation for ordering information.

Ensure that the model selected has enough trapping capacity to hold 50% of the total system charge, in the selected model's case this will be 4.3 kg, so a total system charge of 8.6 kg.

Nomenclature

Series Number → **3100 - XX XX XX _**

Suction Accumulators

ODF Connections	
08 = 1/2”	22 = 1 3/8”
10 = 5/8”	26 = 1 5/8”
12 = 3/4”	34 = 2 1/8”
14 = 7/8”	42 = 2 5/8”
18 = 1 1/8”	50 = 3 1/8”

Nominal Shell Diameter	
30 = 3”	60 = 6”
40 = 4”	65 = 6.5”
50 = 5”	86 = 8.6”
55 = 5.5”	11 = 11”

Volume (Litres)	
07 = 0.7 LTS	59 = 5.8 LTS
16 = 1.6 LTS	63 = 6.3 LTS
17 = 1.7 LTS	72 = 7.2 LTS
19 = 1.9 LTS	96 = 9.6 LTS
24 = 2.4 LTS	10 = 10.5 LTS
26 = 2.6 LTS	13 = 13 LTS
34 = 3.4 LTS	15 = 15 LTS
40 = 4.0 LTS	25 = 25 LTS
55 = 5.5 LTS	35 = 35 LTS

P = Parker Replacement
A = Alco Replacement

Heldon P-Series & A-Series Suction Accumulator cross reference tables

Heldon P-Series / Parker ‘Drop-In’ Replacement	
Heldon Part Number	**Parker Model**
3100-104016P	PA4065-9-5C
3100-124016P	PA4065-9-6C
3100-125024P	PA5083-9-6C
3100-125029P	PA5083-11-6C
3100-145034P	PA5083-12-7C
3100-186055P	PA6125-15-9C
3100-18603P	PA6125-18-9C
3100-226071P	PA6125-20-11C

Heldon A-Series Part Number	Alco Part Number	Henry Part Number
3100-084010A	A AS-464	No Match
3100-104010A	A AS-465	S-7043 *
3100-104017A	A AS-4105	S-7045
3100-124017A	A AS-4106	S-7046
3100-125024A	A AS-596	No Match
3100-145024A	A AS-597	S-7057 *
3100-145040A	A AS-5137	No Match
3100-185048A	A AS-5179	No Match
3100-225048A	A AS-51711	No Match
3100-266011A	A AS-62513	S-7065

* Denotes close match but not exact drop-in

NOTE:

1. The Heldon P-Series & A-Series Accumulators are both provided with a “plugged” gas fitting, for pressure relief purposes where applicable. This connection can be used for a relief device as required by UL207 (overseas markets only)
2. The Heldon P-series / Parker connections are offset in relation to the centre line of the accumulator.

Dimensions and Capacities

Connector	Part Number	Volume (L)	Nominal Capacity kW @ +5c set & 30c sct, pressure drop = 7kPa R404A	R134a	R410A	DIA mm A	Dimensions mm B	mm C	mm D	Weight kg
1/2”	**3100-084010A**	1.0	10.20	5.80	9.80	102.0	168	143	63.5	1.27
5/8”	**3100-104010A**	1.0	11.40	8.70	12.40	102.0	165	143	63.5	1.27
5/8”	**3100-104016P**	1.6	11.40	8.70	12.40	102.0	218	194	43.5	1.9
5/8”	**3100-104017A**	1.7	11.40	8.70	12.40	102.0	279	254	63.5	2.1
5/8”	**3100-104019**	1.9	11.40	8.70	12.40	102.0	270	235	52.0	2.6
3/4”	**3100-124016P**	1.6	24.00	20.50	32.00	102.0	244	220	43.5	2.2
3/4”	**3100-124017A**	1.7	24.00	20.50	32.00	102.0	284	254	63.5	2.1
3/4”	**3100-125024A**	2.4	24.00	20.50	32.00	127.0	246	216	70.0	2.3
3/4”	**3100-125024P**	2.4	24.00	20.50	32.00	127.0	215	186	43.5	2.8
3/4”	**3100-125029P**	2.6	24.00	20.50	32.00	127.0	255	222	43.5	3.2
7/8”	**3100-145024A**	2.4	35.20	22.50	38.30	127.0	251	216	70.0	2.3
7/8”	**3100-145034P**	3.4	35.20	22.50	38.30	127.0	285	245	43.5	3.5
7/8”	**3100-145040**	4.0	35.20	22.50	38.30	127.0	368	328	70.0	3.8
7/8”	**3100-145040A**	3.7	35.20	22.50	38.30	127.0	374	340	70.0	3.22
1 1/8”	**3100-185040**	4.0	60.00	44.00	71.00	127.0	360	315	70.0	3.8
1-1/8”	**3100-185048A**	4.8	60.00	44.00	71.00	127.0	466	429	70.0	3.8
1 1/8”	**3100-185559**	5.9	60.00	44.00	71.00	140.0	430	385	75.0	6.2
1 1/8”	**3100-186055P**	5.5	60.00	44.00	71.00	160.0	340	290	60.5	5.9
1 1/8”	**3100-186063P**	6.3	60.00	44.00	71.00	160.0	420	370	60.5	6.8
1-3/8”	**3100-225048A**	4.8	110.00	86.30	120.00	127.0	470	430	70.0	3.8
1 3/8”	**3100-226071P**	7.1	110.00	86.30	120.00	160.0	460	406	60.5	7.4
1 3/8”	**3100-226563**	6.3	110.00	86.30	120.00	160.0	350	305	85.0	6.2
1-5/8”	**3100-266011A**	11.0	190.00	136.00	208.00	160.0	680	635	75.0	10.3
1 5/8”	**3100-266510**	10.5	190.00	136.00	208.00	160.0	575	525	85.0	9.3
2 1/8”	**3100-346013P**	13.0	195.00	141.00	215.00	160.0	874	820	70.5	14.0
2 1/8”	**3100-348615**	15.0	195.00	141.00	215.00	219.0	533	499	123.0	13.3
2 5/8”	**3100-421125**	25.0	200.00	150.00	221.00	273.0	522	461	165.0	16.0
3 1/8”	**3100-501135**	35.0	204.00	156.00	225.00	273.0	683	623	165.0	23.0

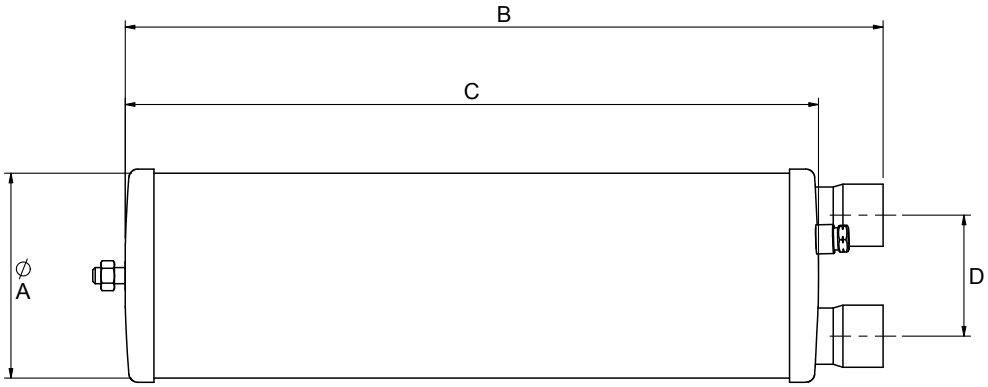

Note: All Heldon Suction Accumulators are to be mounted vertically.

INDUSTRIAL

Screwed-End Circulating Pumps

product features

- Screwed end single head circulating pump
- Manual 3-speed control
- Non-overloading single-phase electric motor
- Cast iron body, polypropylene impeller, porcelain shaft and ceramic bearings

product specification data

Suitable Fluids

- Circulation of hot and cold water
- Water/Glycol mixtures maximum ratio 1:1

Performance

- Fluid temperature range -10°C ~ +110°C
- Maximum working pressure 10bar
- Maximum ambient working temperature 40°C

Motor

- Mains power 1~230v, 50Hz
- Degree of protection IP44
- Insulation class F

Mounting Position

- Pump shaft in the horizontal plane

Product Code	Inlet/Outlet (mm)	Gross Weight (kgs)	Rated Shut-Off (m)
IND-CPN-25-4	38 x 38	3.1	4
IND-CPN-25-6	38 x 38	3.5	6
IND-CPN-32-8	51 x 51	4.7	8

Product Code IND-CPN-25-4

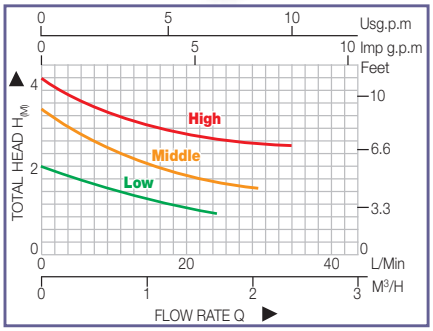

Product Code IND-CPN-25-6

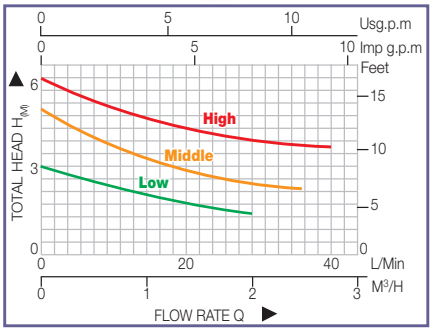

Product Code IND-CPN-32-8

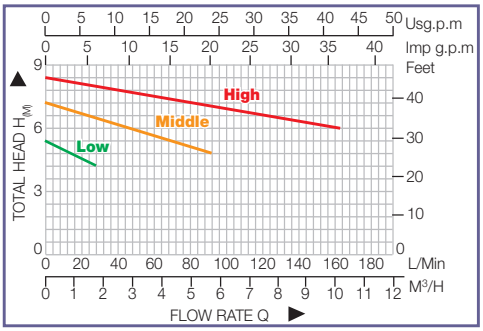

Product Code		Power Watts	Power Horse Power	Maximum Flow (Lts/min)	Maximum Head (m)
IND-CPN-25-4	High	65	0.09	35	4.0
	Middle	46	0.06	30	3.5
	Low	30	0.04	25	3.0
IND-CPN-25-6	High	93	0.12	40	6.0
	Middle	67	0.09	35	5.0
	Low	46	0.06	25	3.0
IND-CPN-32-8	High	245	0.33	170	8.0
	Middle	220	0.29	95	7.0
	Low	145	0.19	25	5.0

product warranty

- The warranty is one year from date of installation providing that documented proof of installation is furnished, or alternatively from date of purchase (proof of purchase slip to be retained).

KWIKOT (PTY) LTD
INLAND DIVISION
PO BOX 1016
BENONI, 1500.
TEL: (011) 897 4600
FAX: (011) 914 4750
AFTER SALES SERVICE TEL: 0861 KWIKOT (594568)
DOMESTIC SALES
e-mail:sales.inland@kwikot.com
EXPORT SALES
e-mail:sales.export@kwikot.com
MARKETING
e-mail:marketing.info@kwikot.com
TECHNICAL
e-mail:technical.info@kwikot.com

KWIKOT (PTY) LTD
EASTERN CAPE DIVISION
PO BOX 3082, NORTH END
PORT ELIZABETH, 6056.
TEL: (041) 373 0575
FAX: (041) 370 0577
DOMESTIC SALES
e-mail:
sales.easterncape@kwikot.com

KWIKOT (PTY) LTD
WESTERN CAPE DIVISION
PO BOX 443,
EPPINDUST, 7475.
TEL: (021) 534 3691
FAX: (021) 534 1606
DOMESTIC SALES
e-mail:
sales.westerncape@kwikot.com

KWIKOT (PTY) LTD
KWAZULU-NATAL DIVISION
PO BOX 47366
GREYVILLE, 4023.
TEL: (031) 547 8700
FAX: (031) 547 8750
DOMESTIC SALES
e-mail:
sales.kwazulunatal@kwikot.com

www.kwikot.com

APPENDIX C: PROTOCOL AND PROGRESS REPORTS

1. **PROTOCOL**

2. **FIRST PROGRESS REPORT**

3. **SECOND PROGRESS REPORT**

UNIVERSITY OF PRETORIA

MOX 410 - Protocol

Domestic hot water heat pump

Marilize Everts s29037078
Study Leader: Prof J.P. Meyer
5/3/2012

BACKGROUND

Electricity has become very expensive and the capital cost of solar systems is very high. The payback periods for the solar systems are more than their life expectancy and thus hot water heat pumps are considered instead. Heat pumps are effective solutions to heating and cooling applications for commercial as well as domestic buildings. The majority of heat pumps work on the same principle as the domestic refrigerator using a vapour compression cycle where heat is transferred from a low-temperature body to a high temperature body. A refrigerant is used in the cycle as a transfer medium. Heat is transferred to the refrigerant in the evaporator, which is at a low temperature and pressure. The compressor compresses the fluid and heat is transferred to the condenser which is at a high temperature and pressure. The fluid then flows through the expansion valve where the temperature drops.

PROBLEM STATEMENT

Heating water with electricity has become very expensive, but an alternative is to rather use hot water heat pumps that only use about one third of the electricity consumption of a geyser.

AIM

The aim of this study is to design a domestic hot water heat pump that can be used for the heating of hot water.

METHOD

The following method will be used for the design of a domestic hot water heat pump:

- Complete list of user specifications
- Literature study
- Concept generation and evaluation
- Detail design
- Detail drawings
- Report

USER SPECIFICATIONS

- Heating capacity: 3 kW
- Wet bulb air temperature: 10 °C
- Condensing temperature: 60 °C
- Environmentally refrigerant: R-410A will be used for this design
- Suitable noise levels for installation in roof or next to house
- Connected to 150 liter hot water storage tank
- Water heated to a temperature of 55 °C

LITERATURE STUDY

A literature study should be done heat pumps, different types of heat exchangers as well as environmentally friendly refrigerants in order to design a suitable domestic hot water heat pump.

CONCEPT GENERATION AND EVALUATION

The evaporator and condenser should be designed from first principles.
The heat pump and water storage tank must be designed as an integral working unit.

A few concepts will be generated and afterwards evaluated by using the matrix evaluation process in order to select the best concept.

DETAIL DESIGN AND DRAWINGS

Detail drawings containing all the necessary dimensions and materials should be provided for the system.
A compilation drawing must also be provided.

REPORT

The report should include the following:

- Literature survey
- User requirements
- Concepts
- Detail analysis and design
- Motivations of decisions
- Detail drawings

DELIVERABLES

- Drawing of the system including hot water heat pump, storage tank, piping, cabinet
- Specification of an environmentally friendly refrigerant
- Detail analysis and optimisation of the evaporator and condenser heat exchanger
- Materials to be used
- Manufacturing methods
- Safety and Environmental Impact
- Cost estimate and payback period
- Functions of control system should be specified only
- Design Report
- Oral Presentation

TARGET DATES

- Protocol 5 March 2012
- First Progress Report 29 March 2012
- Second Progress Report 7 May 2012
- Final Report 4 June 2012
- Final Presentation and oral 22 June 2012

GANTT CHART

Number	Task	Resource	Start	End	Duration	% Complete
1	MOX Design		2/28/2012	6/22/2012	84	
1.1	Protocol		2/28/2012	3/5/2012	5	100.0
1.2	User Specifications		2/28/2012	3/5/2012	5	100.0
1.3	Literature Study		3/3/2012	3/29/2012	19	50.0
1.4	First Progress Report		3/24/2012	3/29/2012	4	
1.5	Concept Generation and Evaluation		3/30/2012	4/10/2012	8	
1.6	Detail Design and Specifications		4/11/2012	5/7/2012	19	
1.7	Second Progress Report		5/2/2012	5/7/2012	4	
1.8	Final Report		5/8/2012	6/5/2012	21	
1.9	Final Oral Presentation		6/16/2012	6/22/2012	5	

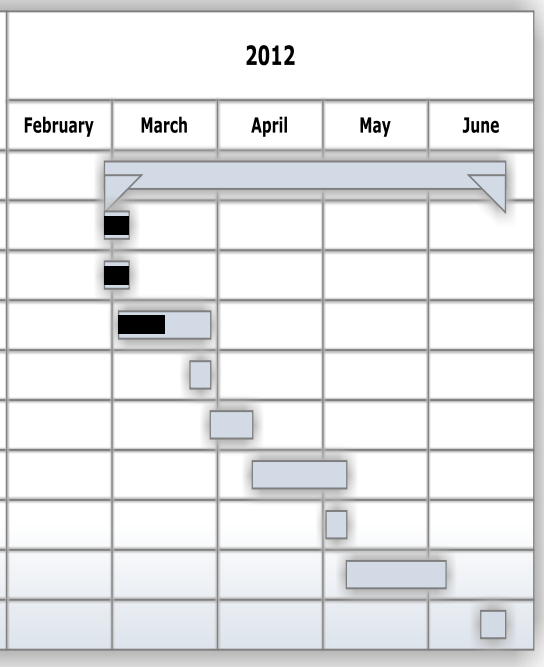

UNIVERSITY OF PRETORIA

DOMESTIC HOT WATER HEAT PUMP

MOX 410 – FIRST PROGRESS REPORT

Study Leader: Prof JP Meyer
Marilize Everts s29037078
3/29/2012

Marilize Everts

Prof J.P. Meyer

WORK COMPLETED UP TO DATE

The user specifications have been identified and will be incorporated in the design.

A literature study has been done on hot water heat pump cycles, heat exchangers, refrigerants, as well as the main heat pump components. From this, the type of heat exchanger for the evaporator and condenser has been identified, as well as the type of compressor and expansion valve. A suitable environmentally refrigerant has also been identified.

PROJECT PLAN

Since the required background knowledge needed for the design has been obtained, the design process can now be started. Calculations need to be done in order to design the evaporator and condenser from first principles and select the compressor, pump and fan scientifically.

PERSONAL OPINION

Up to now, no problems are foreseen and the project is still on schedule. If the schedule is adhered to, the deadlines will be met and the result will be a well-designed domestic hot water heat pump.

Number	Task	Resource	Start	End	Duration	% Complete	2012				
							February	March	April	May	June
1	MOX Design		2/28/2012	6/22/2012	84						
1.1	Protocol		2/28/2012	3/5/2012	5	100.0					
1.2	User Specifications		2/28/2012	3/5/2012	5	100.0					
1.3	Literature Study		3/3/2012	3/29/2012	19	100.0					
1.4	First Progress Report		3/24/2012	3/29/2012	4	100.0					
1.5	Concept Generation and Evaluation		3/30/2012	4/10/2012	8						
1.6	Detail Design and Specifications		4/11/2012	5/7/2012	19						
1.7	Second Progress Report		5/2/2012	5/7/2012	4						
1.8	Final Report		5/8/2012	6/5/2012	21						
1.9	Final Oral Presentation		6/16/2012	6/22/2012	5						

UNIVERSITY OF PRETORIA

DOMESTIC HOT WATER HEAT PUMP

MOX SECOND PROGRESS REPORT

Study Leader: Prof JP Meyer
Marilize Everts s29037078

Marilize Everts

Prof J.P. Meyer

WORK COMPLETED UP TO DATE.

- A feasibility study was done to prove that there is a need for the domestic hot water heat pump.
- A functional analysis to establish the main function of the components
- Design Requirements were set up
- Concepts of the condenser and evaporator were generated and evaluated
- The condenser and evaporator have been designed and optimised.
- The compressor, water pump, expansion valve and fan have been scientifically selected.

PROJECT PLAN

The components for the heat pump have been designed and selected, thus all of them should now be incorporated in one compact system. A detail drawing of the system will be given to Mr WN Plomp and afterwards manufacturing drawings of two components, as well as free hand sketches of two other parts will be made. A manufacturing schedule and list of materials will also be provided. A cost analysis will be done and the safety and environmental impact should also be investigated.

CHANGES MADE

The Gantt Chart provided in the Protocol and First Progress Report has been refined and adjusted slightly in order to allow more time for the design process and design drawings, as well as to be more specific of what have been done and should be done in the report.

In the Protocol it was mentioned that R410A will be use as the working fluid, however, it has been changed to R134.

PERSONAL OPINION

Up to now, the project is still on schedule. If the schedule is adhered to, the deadlines will be met and the result will be a well-designed domestic hot water heat pump.

REVISED GANTT CHART

Number	Task	Start	End	Duration	% Complete
1	MOX Design	2/28/2012	6/22/2012	84	
1.1	Protocol	2/28/2012	3/5/2012	5	100.0
1.2	User Specifications	2/28/2012	3/5/2012	5	100.0
1.3	Literature Study	3/3/2012	4/10/2012	27	100.0
1.4	First Progress Report	3/24/2012	3/29/2012	4	100.0
1.5	Feasibility Study	3/24/2012	3/29/2012	4	100.0
1.6	Functional Analysis	3/30/2012	4/6/2012	6	100.0
1.7	Design Requirements	3/30/2012	4/6/2012	6	100.0
1.8	Concept Generation and Evaluation	3/30/2012	4/10/2012	8	100.0
1.9	Detail Design and Specifications	4/11/2012	5/7/2012	19	100.0
1.9.1	Condenser	4/11/2012	4/23/2012	9	100.0
1.9.2	Evaporator	4/23/2012	5/7/2012	11	100.0
1.9.3	Compressor, Expansion valve, Fan and Pump	4/11/2012	5/7/2012	19	100.0
1.10	Second Progress Report	5/2/2012	5/7/2012	4	100.0
1.11	Drawings	5/7/2012	5/31/2012	19	
1.12	Manufacturing Schedule	5/20/2012	5/31/2012	9	
1.13	Qualification Requirements	5/20/2012	5/31/2012	9	
1.14	Cost Analysis	5/20/2012	5/31/2012	9	
1.15	Safety and Environmental Impact	5/20/2012	5/31/2012	9	
1.16	Final Report	5/31/2012	6/4/2012	3	
1.17	Final Oral Presentation	6/5/2012	6/22/2012	14	

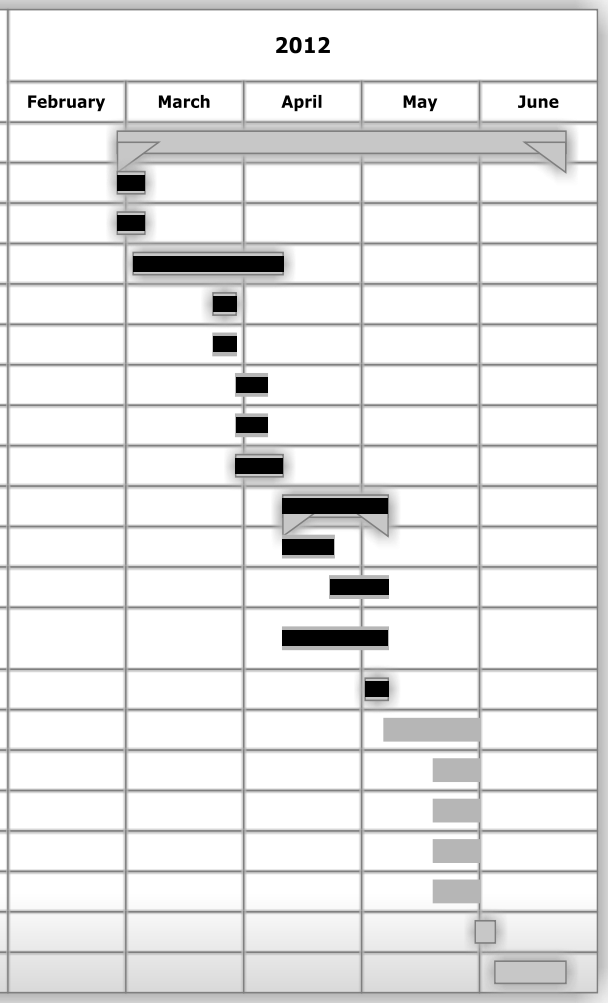

Annexure D: Evaluation Sheet

DESIGN MOX 410	**Date:**
Student:	**Student number:**

ECSA outcomes 3 and 6 are evaluated and these must be passed with a sub minimum of 50% for outcome 3 AND 50% for outcome 6 to be able to pass the module

OUTCOME 3: ENGINEERING DESIGN AND SYNTHESIS		**Mark**	**Exam**	**Yes**	**No**
1	Is the student able to identify and formulate the problem to satisfy the user needs, applicable standards, codes of practice and legislation?	15		√	×
2	Is the student able to plan and manage the design process and able to focus on important issues recognizing and dealing with constraints?	10		√	×
3	Is the student able to acquire and evaluate the required knowledge, information and resources, apply correct principles, evaluate and use design tools?	20		√	×
4	Can the student perform design tasks including analysis, quantitative modeling and optimization?	20		√	×
5	Can the student evaluate alternatives and preferred solution, exercise judgment, test implementability and perform techno-economic analysis (cost analysis, manufacturing costs)?	20		√	×
6	Did the student take into account the impacts and benefits of the design: social, legal, health, safety and environment?	15		√	×
	Total for outcome 3 (sub minimum of 50% to pass)	**100**			
Is the student capable to perform creative procedural and non-procedural design and synthesis in order to solve an engineering problem - *if the answer is "NO" a mark of less than 50% must be awarded*				√	×

OUTCOME 6: PROFESESSIONAL AND GENERAL COMMUNICATION Written report and drawings		**Mark**	**E1**	**Yes**	**No**
1	Did the student communicate the design logically – can the reader follow the design detail and methodology?	15		√	×
2	Was a literature study properly conducted and properly reported on and were the right conclusions drawn from the literature and background study?	15		√	×
3	Is the report properly laid out, with proper language, grammar and general appearance?	10		√	×
4	Does the average reader understand the problem and why work was done?	10		√	×
5	Is everything defined and does the reader have a good idea what the research was all about?	10		√	×
6	Are the summary/conclusion and recommendation handled correctly in the report?	10		√	×
7	Are the drawings (detail and assembly) to an acceptable engineering standard? ***(Sub minimum of 50% apply for a student to pass) The drawing specialist grades all the drawings. Please use this mark as a guideline.***	15		√	×
	Presentation				
8	Organization (purposeful, clear)	5		√	×
9	Manner (confident, direct)	5		√	×
10	Body language and value of speech	5		√	×
	Total for outcome 6 (sub minimum of 50% to pass)	**100**			
Did the student communicate effectively, both orally and in writing within engineering audiences and to the community at large. The communication should be of an appropriate structure, style and graphical support. Drawings should be to an acceptable engineering standard – ***if the answer is "NO" a mark of less than 50% must be awarded.***				√	×