UNIVERSITEIT VAN PRETORIA
UNIVERSITY OF PRETORIA
YUNIBESITHI YA PRETORIA

Design of a 12 kW air-cooled water chiller

Samantha Ayres

10261720

5/27/2013

Study Leader: Professor J.P. Meyer

MEGANIESE EN LUGVAARTKUNDIGE INGENIEURSWESE
MECHANICAL AND AERONAUTICAL ENGINEERING

UNIVERSITEIT VAN PRETORIA
UNIVERSITY OF PRETORIA
YUNIBESITHI YA PRETORIA

INDIVIDUAL COVER SHEET FOR PRACTICALS / INDIVIDUELE DEKBLAD VIR PRAKTIKA

Module code / Modulekode: MOX 410		**Module: DESIGN**	
Practical number: **Praktikum nommer:**		**Date of submission:** **Datum van inhandiging: 27 MAY 2013**	
Student / Student	**Initials / Voorletters** **SR**	**Surname / Van** **AYRES**	**Student number / Studentenommer** **10261720**

Declaration: 1. I understand what plagiarism is and am aware of the University's policy in this regard. 2. I declare that this practical report is my own, original work. 3. I did not refer to work of current or previous students, memoranda, solution manuals or any other material containing complete or partial solutions to this assignment. 4. Where other people's work has been used (either from a printed source, Internet, or any other source), this has been properly acknowledged and referenced. 5. I have not allowed anyone to copy my work/report.	**Verklaring:** 1. Ek begryp wat plagiaat is en is bewus van die Universiteitsbeleid in hierdie verband. 2. Ek verklaar dat hierdie praktikumverslag my eie, oorspronklike werk is. 3. Ek het nie gebruik gemaak van huidige of vorige studente se werk, memoranda, antwoord-bundels of enige ander materiaal wat volledige of gedeeltelike oplossings van hierdie werkstuk bevat nie. 4. In gevalle waar iemand anders se werk gebruik is (hetsy uit 'n gedrukte bron, die Internet, of enige ander bron), is dit behoorlik erken en die korrekte verwysings is gebruik. 5. Ek het niemand toegelaat om my werk/verslag te kopieer nie.
Signature of Student **Handtekening van Student**	

ECSA OUTCOME 4: INVESTIGATIONS, EXPERIMENTS AND DATA ANALYSIS **Did the student:**		**Max mark**	**Mark awarded**	**Yes**	**No**
1	Plan and conduct his/her investigation/experiment in an appropriate and scientific manner?	10		√	×
2	Perform the necessary analyses and interpretations and/or derived valid information from the data?	50		√	×
3	Draw conclusions based on the evidence or data obtained?	20		√	×
4	Communicate the purpose, process and outcomes/conclusions in a technical report in a coherent manner?	20		√	×
	Total for outcome 4 (minimum of 50% to pass)	**100**			
Is the student capable of applying research methods, planning and conducting investigations and experiments using appropriate equipment – ***<u>if the answer is "NO" a mark of less than 50% must be awarded</u>***				√	×

Marked by	
Signature	
Date	

Abstract

Title:	Design of a 12 kW air-cooled water chiller
Author:	Samantha Ayres
Student Number:	10261720
Supervisor:	Professor J.P. Meyer
Starting date:	11 February 2013
Finishing Date:	27 May 2013

Internationally there is a lack of energy, and especially in South Africa, which has resulted in an increasing energy efficiency demand. Systems are required to operate at higher efficiencies. Chillers are becoming more common in air-conditioning, industrial and aerospace applications and thus a chiller with a coefficient of performance (COP) greater than 2.2 is required, in order to meet the energy efficiency demands. The aim of this design project is to design a chiller with a COP of 2.2 or greater, which chills water from a temperature of 20°C to a temperature of 10°C, at a flow rate of 1000 l/hr. The refrigerant used is R-134a, which is environmentally friendly. Incorporated in this report is the literature study, which discusses the components of the chiller and the detail design of the chiller, including the specifications of the standard components and the designs of the heat exchangers. The standard components specified for this chiller are the compressor, suction accumulator, expansion valve, fan and water pump. The housing of the entire system was also designed. Concept generation and concept selection are very important to this project; because it is through this that the most efficient and compact designs are determined and decided upon. Detail designs of the condenser, evaporator, condenser distributor and base plate were done. Different analyses are also included which are used to determine whether the chiller is functional and useable. These analyses include manufacturing analysis, maintenance analysis, reliability analysis, qualification requirements, environmental and safety impacts and cost analysis. The total cost of the design was found to be R27 822.00.

Acknowledgements

I would like to thank the suppliers who were willing to give me the information I needed to complete this project. I would also like to thank Professor J.P. Meyer for the guidance he has giving me throughout the completion of my project.

Table of Contents

Nomenclature

A_s	Surface area	m^2
A_c	Cross-sectional area	m^2
C	Specific heat	J/kg·K
c_f	Friction coefficient	
d,D	Diameter	m
D_h	Hydraulic diameter	m
g	Gravitational acceleration	m/s^2
Gr	Grashof number	
h	Convection heat transfer coefficient	$W/m^2 \cdot K$
I	Electric current	A
k	Thermal conductivity	W/m·K
L	Length	m
L_c	Corrected length	m
m	Mass	kg
$\dot{m}$	Mass flow rate	kg/s
Nu	Nusselt Number	
p	Perimeter	m
P	Pressure	Pa
Pr	Prandtl number	
$\dot{q}$	Heat flux	W/m^2
Q	Total heat transfer	J
$\dot{Q}$	Hear transfer rate	W
rc_r	Critical radius of insulation	m
R, r	Radius	m
R	Thermal resistance	K/W
R_c	Thermal contact resistance	$m^2 \cdot K/W$
R_f	Fouling factor	
R-value	R-value of insulation	
Ra	Raleigh number	
Re	Reynolds number	
St	Stanton number	
t	Time	s
T	Temperature	°C or K
T_b	Bulk fluid temperature	°C or K
T_s	Surface temperature	°C or K
U	Overall heat transfer coefficient	$W/m^2 \cdot K$
V	Voltage	V
V	Volume	m^3
V	Velocity	m/s
V_{avg}	Average velocity	m/s
$\dot{W}$	Power	W

Greek Letters

A	Thermal diffusivity	m^2/s
ΔP	Pressure drop	Pa
ΔT_{lm}	Log mean temperature difference	
ε	Emissivity	
ε	Roughness size	m
η_{fin}	Fin efficiency	
η_{th}	Thermal efficiency	
μ	Dynamic viscosity	kg/m·s
ν	Kinematic viscosity	m^2/s
ρ	Density	kg/m^3
θ	Dimensionless temperature	

Subscripts

atm	Atmospheric
avg	Average
b	Bulk
cond	Conduction
conv	Convection
e	Exit conditions
i	Inlet, initial conditions
o	Outlet conditions
s	Surface
surr	Surroundings
sat	Saturated
sys	System

List of Figures

List of Tables

Chapter 1

Introduction

1.1 Background

A chiller is a system which functions to chill or cool water to desired temperatures which is usually a temperature of about 10°C. This is a thermodynamic vapour compression system which can be used for air-conditioning, industrial and aerospace applications.

An inlet of water at a temperature of about 20 to 30°C flows through a heat exchanger which works as an evaporator. This is to remove the heat and thus cools the water. A cold refrigerant is generally used to boil the gas, and the pressure is increased using a compressor. This vapour is then at a temperature higher than that of the ambient. The heat absorbed from the water, and the work of the compressor is then released to the environment, and as a result, the refrigerant is condensed. The refrigerant then flows through an expansion valve which decreases the temperature, before it once again flows through the evaporator and the cycle begins again.

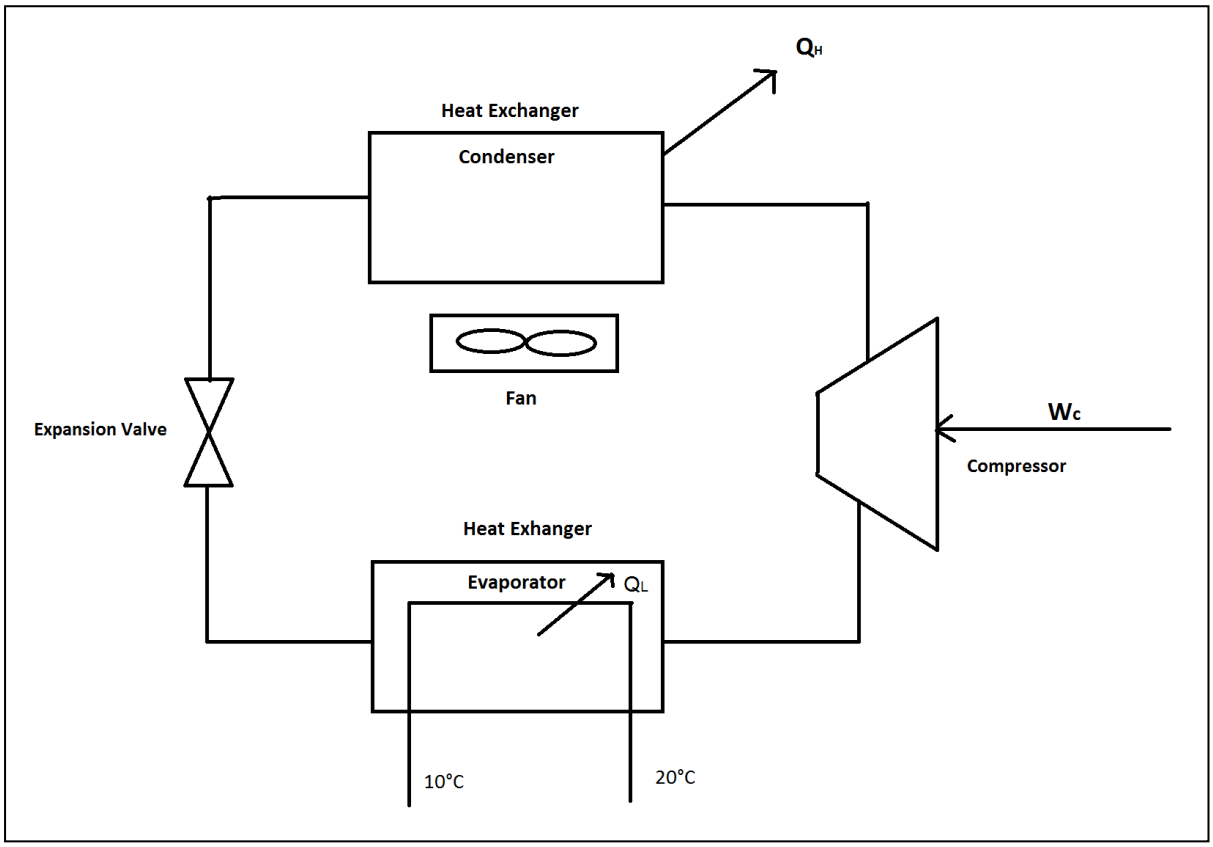

Figure 1: Schematic of chiller

Scope of Work

1.2 Problem Statement

The Coefficient of Performance (COP) of a chiller is approximately two, and in some cases, less than two. A more efficient chiller is therefore required and therefore one with a higher COP. This increase in efficiency is better for the environment and from an energy point of view.

1.3 Objective

The objective of this project is to design a chiller with a COP of 2.2. This increase in the COP has its benefits for the environment, as it would be more efficient, and therefore energy can be saved. The entire system layout must be designed accurately. Some standard components will be used, and some will be newly designed.

1.4 Requirements

Calculations will need to be done in order to select the standard components, and to guide with the newly designed components. Pressures, temperatures and flow rates will need to be known to design the heat exchangers and to ensure that the COP of 2.2 is achieved. The system must be designed and manufacturing drawings submitted. These drawings include one compilation drawing and four detail designs (two hand-drawn, and two using software).

1.5 User Requirements

A chiller is to be designed in order to accommodate air-conditioning, industrial and aerospace applications. The chiller must operate with a Coefficient of Performance (COP) of at least 2.2. It must accommodate for a flow rate of 1 000 l/hr of water. This water must be produced at 10°C, with an inlet water temperature of 20°C. The ambient conditions used for the design of this chiller must be that of Pretoria.

Chapter 2

Literature Study

2.1 Introduction

This literature study will look at possible designs with respects to the components of the system. Heat exchangers, expansion valves, suction accumulators and the compressor theory will be discussed. Heat exchangers are to be designed whereas the expansion valve, compressor and suction accumulator are to be standard components. Therefore more in depth designs of different types of heat exchangers will be discussed, both for condensers and evaporators.

2.2 First Law of Thermodynamics

As stated by Borgnakke and Sonntag (2009), "The first law of thermodynamics states that during any cycle, a system (control mass) undergoes, the cyclic integral of the heat is proportional to the cyclic integral of the work". Essentially, this law is the conservation of energy, energy in equal's energy out. It is defined by the equation:

$$dE = \delta Q - \delta W$$

Where E is the energy of the system and comprises of the internal energy, kinetic energy and potential energy. The first law of thermodynamics for a state change is defined as:

$$dE = dU + d(KE) + d(PE) = \delta Q - \delta W$$

Where U is the internal energy, which is all other energies associated with the thermodynamic state of the system. When substituting for the different energies, the first law may be written as:

$$U_2 - U_1 + \frac{m(V_2^2 - V_1^2)}{2} + mg(Z_2 - Z_1) = 1Q2 - 1W2$$

The first law of thermodynamics may also be written in terms of the rate, and is defined as:

$$\frac{dE}{dt} = \dot{Q} - \dot{W}$$

Or as:

$$\dot{m}(u_2 - u_1) + \frac{\dot{m}(V_2^2 - V_1^2)}{2} + \dot{m}g(Z_2 - Z_1) = 1\dot{Q}2 - 1\dot{W}2$$

Where 'u' is the specific internal energy and ṁ is the mass flow rate.

When considering a control volume instead of a control mass, the changes that occur to the above equation, are that the enthalpy is used instead of the internal energy, and the energy term is comprised of possibly more than one inlet and/or outlet.

This equation for the steady state process is:

$$\dot{Q}_{cv} + \sum \dot{m}_i \left(h_i + \frac{1}{2}\dot{V}_i^2 + gZ_i\right) = \sum \dot{m}_e \left(h_e + \frac{1}{2}\dot{V}_e^2 + gZ_e\right) + \dot{W}_{cv}$$

2.3 Coefficient of performance

The coefficient of performance is linked to the efficiency of the system. It may be defined as the ratio of the energy sought, to the energy that costs (work done) (Borgnakke & Sonntag, 2009), or by the equation for cooling:

$$\beta = \frac{Q_L\ (energy\ sought)}{W\ (energy\ that\ costs)} = \frac{Q_L}{Q_H - Q_L}$$

Another equation for the coefficient of performance exists for heating and this is:

$$\beta' = \frac{Q_H\ (energy\ sought)}{W\ (energy\ that\ costs)} = \frac{Q_H}{Q_H - Q_L}$$

A relationship exists between the two different coefficient of performance for heating and cooling, and this is defined as:

$$\beta' - \beta = 1$$

A household refrigerator has a COP of about 2.5, whereas a deep-freeze unit has one which is closer to 1.0 (Borgnakke & Sonntag, 2009).

2.4 Vapour-Compression Refrigeration Cycle

The refrigeration cycle is discussed briefly because this is the system in which the refrigerant of the chiller flows. The only addition is through the evaporator, where the water for the air-conditioning or industrial application is cooled. The two figures below (Borgnakke & Sonntag, 2009) show the vapour-compression refrigeration cycle, and this ideal process will be discussed afterwards.

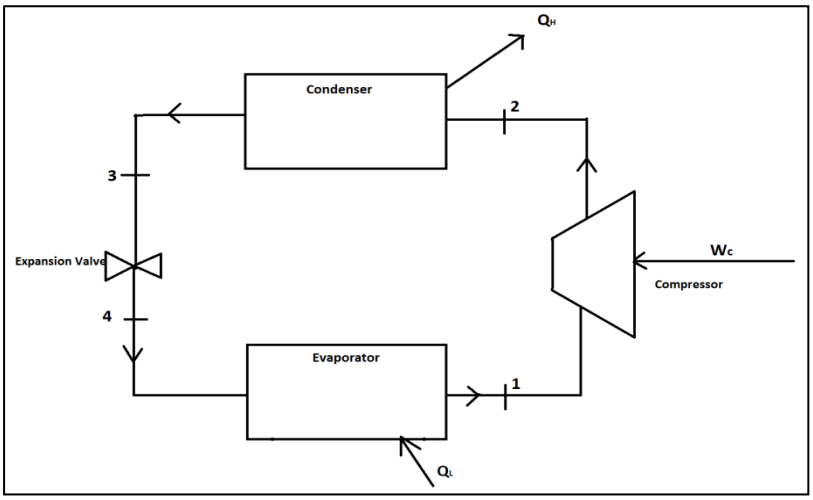

Figure 2: Schematic of the ideal vapour-compression refrigeration cycle

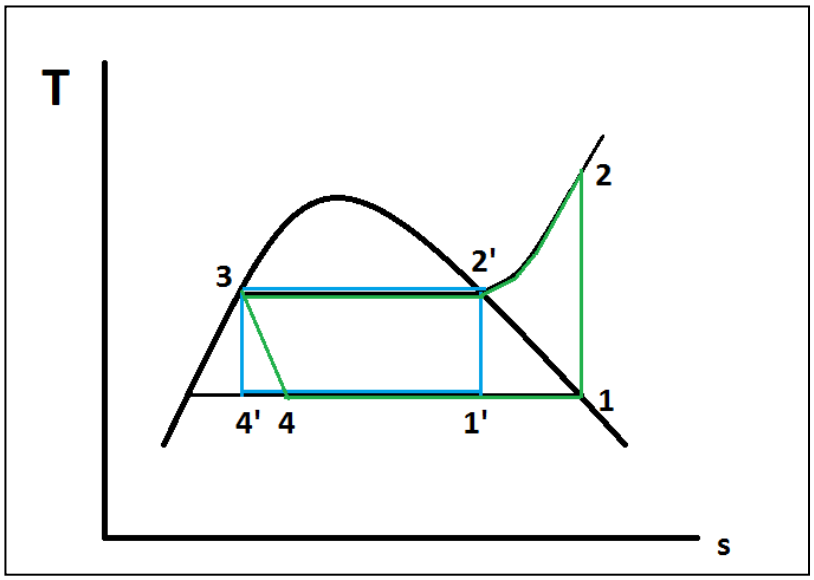

Figure 3: Temperature-entropy diagram of the ideal vapour-compression refrigeration cycle

As mentioned before, this is the ideal refrigeration cycle for a working substance which undergoes a phase change in the process.

It can be seen that state 1 is saturated vapour and state 3 is saturated liquid from the Temperature-Entropy diagram. When considering the green path, from point 3 to point 4, isentropic expansion occurs, resulting in a two-phase region (but mostly liquid). Usually the path from point 3 to point 4 would incorporate a turbine. The minor work output, however, would not be enough to warrant the inclusion of this piece of equipment, and thus an expansion valve is included, to enable throttling. This cycle is termed the ideal model for the vapour-compression evaporation system. Some important properties for this system are:

- A reversible adiabatic process occurs between point 1 and point 2.
- Heat is rejected from point 2 to point 3 during an isobaric process (condensation).
- The process (evaporation) between point 4 and point 1 is also an isobaric process.
- The throttling process is an adiabatic process.

The other cycle (blue) shown on the Temperature-Entropy diagram, is the ideal Carnot cycle. In this cycle, the fluid remains in the two-phase region.

It is important to note that the coefficients of performance for the above cycle are:

Refrigeration system:

$$\beta = \frac{q_L}{w_c}$$

Heat pump:

$$\beta' = \frac{q_H}{w_c}$$

This is due to the fact that there is a constant flow rate throughout this system, and therefore the specific work and specific heat (energy sought) can be used.

2.5 Compressor

The function of a compressor is to increase the fluid pressure by shaft work or power. The rotary compressor is the most common fundamental type and makes use of either axial or centrifugal flow. The fluid enters the compressor at a low pressure and exits at a high velocity, due to the shaft work which causes the blades to rotate. A compressor and a pump are the same piece of equipment. The only difference is that a compressor is used for gases, and a pump for liquids. Different types of compressors exist: reciprocating compressors, rotary screw compressors, rotary sliding vane compressors, and centrifugal compressors.

A reciprocating compressor, also known as a piston compressor, is a positive displacement compressor. Ideally, the flow rate is constant for any pump head; however, slippage can result in a decreased flow rate at large pump heads. Essentially an air chamber is filled and then the volume is decreased, which compresses the gas. These are the most common types of compressors (Davey Compressor Company).

Rotary screw compressors, also positive displacement compressors, work with two helical mated screws and their housing. The spaces between these components are filled with air, and the volume is decreased as the screws are turned. This increases the air pressure. Lubrication occurs by the injection of oil into the bearing and compression area (Davey Compressor Company).

Rotary sliding vane compressors are also positive displacement compressors. The components of this compressor are a rotor, stator, and 8 blades. As the rotor turns a revolution, the volume goes from a maximum at the intake, to a minimum at the exhaust. Oil is injected along with the air (Davey Compressor Company).

Centrifugal pumps are filled with liquid, through a suction nozzle (eye), while the impeller rotates. The liquid gets trapped between the blades of the impeller. The impeller is connected to a shaft which is driven by a motor. The rotation of the impeller causes energy to be transferred to the liquid. The velocity of the liquid increases as it moves towards the outside edge of the impeller, or the vanes. As the fluid accelerates towards the exit velocity (at the diameter), a low pressure zone is created at the eye of the impeller. This is shown by Bernoulli's law, which states that as the velocity increases, the pressure decreases. The flow of liquid out of the vanes allows for more liquid to enter the impeller eye. This is due to the fact that the pressure decreased. The casing around the impeller is termed the volute. The liquid that is expelled from the impeller is collected here. This is where the high velocity is converted to a high pressure (Bernoulli in reverse) (Bachus & Custodio, 2003). Figure 4 shows a centrifugal pump (Dholariya, 2012).

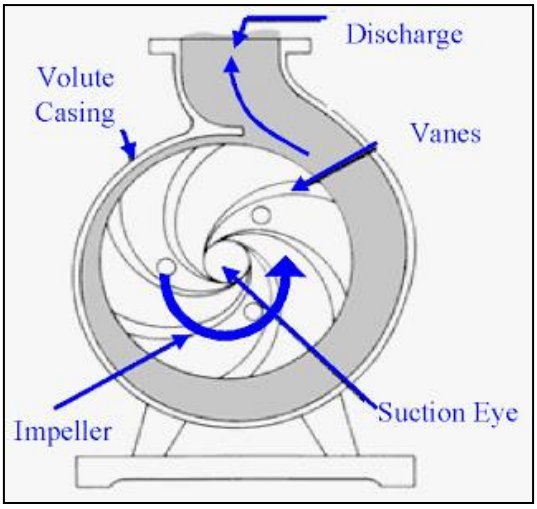

Figure 4: Centrifugal pump (Dholariya, 2012)

The table below summarises the advantages and disadvantages, for different pump types, as stated by Davey Compressor Company.

Type	Advantages	Disadvantages
Reciprocating Compressor	• Simple design • Lower initial cost • Easy to install • Two stage models offer the highest efficiency • No oil carryover • Large range of horsepowers • Special machines can reach extremely high pressures	• Higher maintenance costs • Many moving parts • Potential for vibration problems • Foundation may be required depending on size • Many are not designed to run at full capacity 100% of the time
Rotary Screw Compressor	• Simple design • Low to medium initial cost • Low to medium maintenance cost • Two-stage designs provide good efficiency • Easy to install • Few moving parts • Most popular compressor design in plants	• Limited airend life • Airends are not field serviceable • High rotational speeds • Shorter life expectancy than other designs • Oil injected designs have oil carryover • Single-stage designs have lower efficiency • Two-stage, oil-free designs have higher initial cost • Difficulty with dirty environments
Rotary Vane Compressor	• Simple design • Easy to install • Low to medium cost • Low maintenance cost • Field serviceable airend • Long life airend • Low rotational speeds • Very few moving parts • Forgiving to dirty environments	• Oil injected designs have oil carryover • Single-stage designs have lower efficiency • Difficulty with high pressures (over 200 psi) • Oil-free designs are unavailable

Centrifugal Compressor	• High efficiencies approaching two-stage reciprocating compressors • Can reach pressures up to 1200 psi • Completely packaged for plant or instrument air up through 500 hp • Relative first cost improves as size increases • Designed to give lubricant free air • Special foundations	• High initial cost • Complicated monitoring and control systems • Limited capacity control modulation, requiring unloading for reduced capacities • High rotational speeds require special bearings and sophisticated vibration and clearance monitoring • Specialized maintenance considerations

Table 1: Advantages and disadvantages for different compressor types

The efficiency of a compressor or pump is given by the equation:

$$\eta_{comp} = \frac{w_s}{w} = \frac{h_i - h_{es}}{h_i - h_e}$$

Where's' denotes the isentropic cycle. Therefore the efficiency of a compressor is the ratio of the isentropic work to the actual work.

2.6 Expansion Valve

Expansion valves are used to perform a throttling process. Another option is to use a length of small-diameter tubing. The fluid is transferred from the high-pressure region to the low-pressure region of the throttle and this is due to a restriction in the flow passage. This can be achieved by using a partially closed valve or a capillary tube. A capillary tube is essentially a section of tube with a smaller diameter (Borgnakke & Sonntag, 2009). The restriction causes a pressure drop on the outlet side of the throttle. The velocity of the fluid increases due to the constant flow rate.

$$\dot{m}_i = \rho_i A_i v_i = \rho_o A_o v_o = \dot{m}_o$$

The relationship above shows, that for a constant mass flow rate, as the area decreases, the velocity increases. This is assuming a constant density. For steady-state cases, it may be assumed that the inlet enthalpy is equal to the outlet enthalpy for the pressure drop. A phase change may occur in a throttling process.

Figure 5 below shows a basic schematic of the throttling process (Borgnakke & Sonntag, 2009).

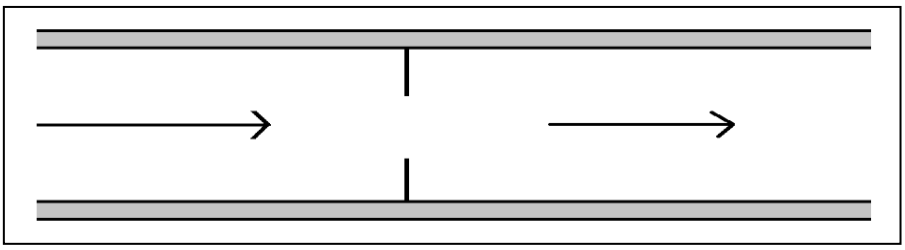

Figure 5: Throttling process

Expansion valves can be either thermal expansion valves (TEV's) or electronic expansion valves. Electronic expansion valves can be used under tighter operating conditions than TEV's which allow

for lower system costs and energy saving due to an increased efficiency (Emerson Climate Technologies, 2013).

2.7 Heat Exchangers

2.7.1 Process Background

Heat exchangers work on the principle of thermodynamic equilibrium, whereby, if two bodies or substances come into contact, the cold will get warmer, and the hot, cooler, until a median temperature is achieved. This is using the second law of thermodynamics.

A heat exchanger basically undergoes a process whereby heat is transferred to or from a fluid. This fluid may boil (liquid to vapour) or condense (vapour to liquid) and it is either heated or cooled. An example of this occurs in a refrigeration system, as discussed in the vapour-compression refrigeration system. For a refrigeration system condenser, refrigerant vapour enters the heat exchanger which contains cold water pipes. The vapour is then cooled and condenses to form liquid refrigeration, which then exits the heat exchanger. Usually this is an isobaric process (the pressure drop is small and therefore negligible). No work is done on the heat exchanger and the potential and kinetic energies of the system are negligible. The exit velocity can, however, be calculated when considering the change in density and the area of the outlet compared to the inlet. The heat is transferred from the refrigerant to the cold water pipes. In specific terms, the first law may be written as:

$$q + h_i + \frac{V_i^2}{2} + gZ_i = h_e + \frac{V_e^2}{2} + gZ_e + w$$

$$q = \frac{\dot{Q}_{CV}}{\dot{m}}$$

$$w = \frac{\dot{W}_{CV}}{\dot{m}}$$

The figure below shoes the schematic diagram of the example discussed above ((Borgnakke & Sonntag, 2009).

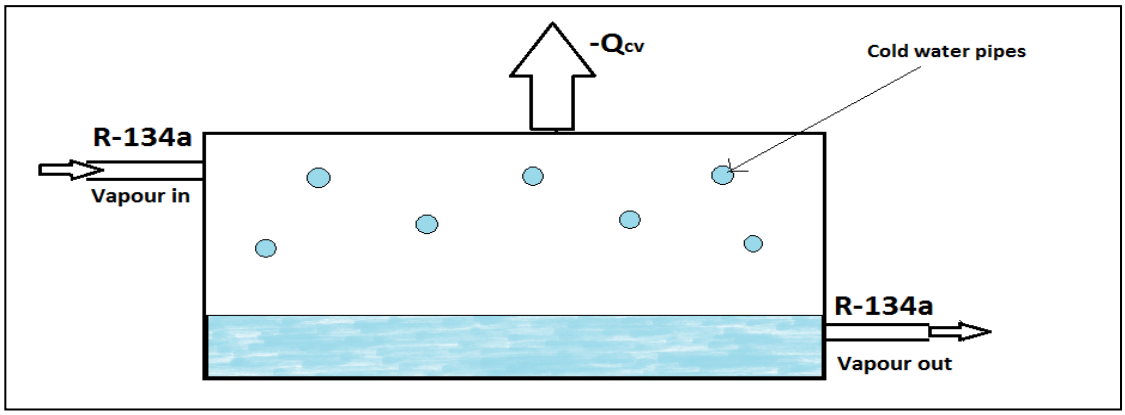

Figure 6: A refrigeration system condenser

2.7.2 Types of Heat exchangers

Heat exchangers are generally classified in terms of the direction of flow. Parallel-flow, cross-flow and counter-current flow are the three general different types of flow which exist. In parallel-flow, the flows move in the same direction for the hot and cold fluid, and enter and exit on the same side of the exchanger, adjacent to one another. In cross-flow, the cold and hot fluid move perpendicular to one another. In counter-current heat exchangers, the flows of the hot and cold fluid move in opposing directions and enter the exchanger where the other fluid exits. These counter-current heat exchangers tend to be the most efficient of the three general types. The composition of the heat exchanger is then used to classify the heat exchanger further. The composition can include multiple tubes or hot plates (ThomasNet.com, 2013).

A double pipe heat-exchanger is one which has one pipe, surrounded by another. One fluid flows in the smaller diameter tube, and one in the larger diameter tube. These heat exchangers make use of parallel or counter-current flow. The counter-current flow is more effective than the parallel flow heat exchanger. These are depicted in the figure below (Cengel & Ghajar, 2011).

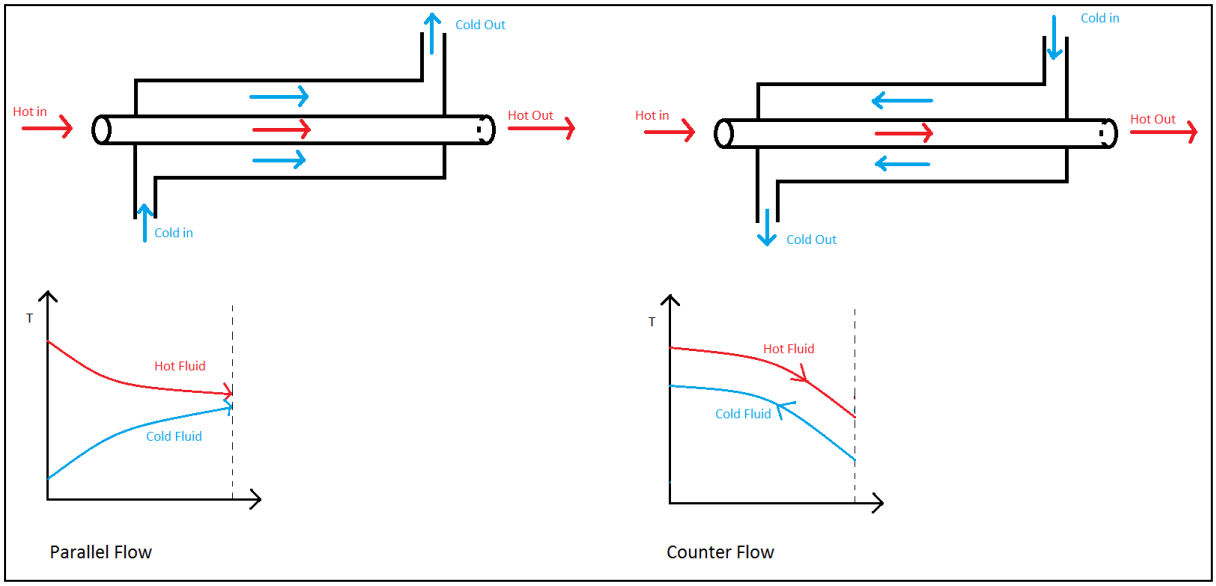

Figure 7: Different flow regimes and associated temperature profiles in a double-pipe heat exchanger

A compact heat exchanger is designed to have a large surface area per unit volume. A parameter which exists for these heat exchangers is the area density β. This parameter is the ratio of the heat transfer surface area to the volume. A compact heat exchanger typically has an area density $\beta=700m^2/m^3$. Usually only laminar flow exists and the flow passages are small. High heat transfer rates can be obtained in a small volume due to cross-flow. These heat exchangers are very well suited to situations where weight and volume are limited (Cengel & Ghajar, 2011). Figure 8 is an example of a compact heat exchanger (Compact Heat Exchanger, 2013).

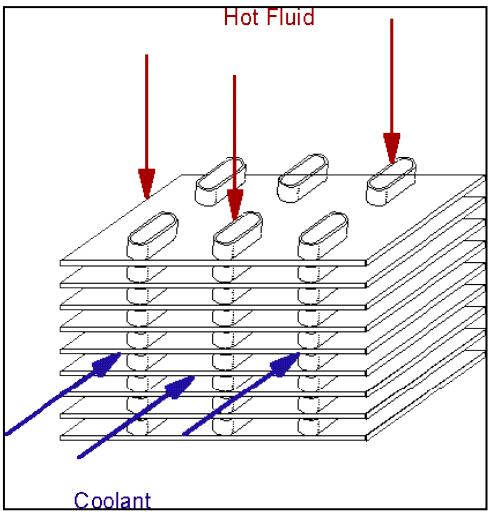

Figure 8: Compact heat exchanger (Compact Heat Exchanger, 2013)

The most common type of heat exchanger is the shell-and-tube heat exchanger. Essentially, a shell-and-tube heat exchanger is comprised of a number of tubes parallel to, and inside a shell. One fluid flows through the tubes, while another flows in the shell surrounding the tubes. Baffles are commonly used to force the shell fluid to flow across the entire shell, as to cool or heat all of the tube fluid. This enhances the heat transfer. A shell-and-tube heat exchanger cannot be used for automotive and aircraft applications. Headers exist at either end of the heat exchanger, where large flow occurs (Cengel & Ghajar, 2011). An example of a shell-and-tube heat exchanger is shown in the figure below (Black & White, 2012).

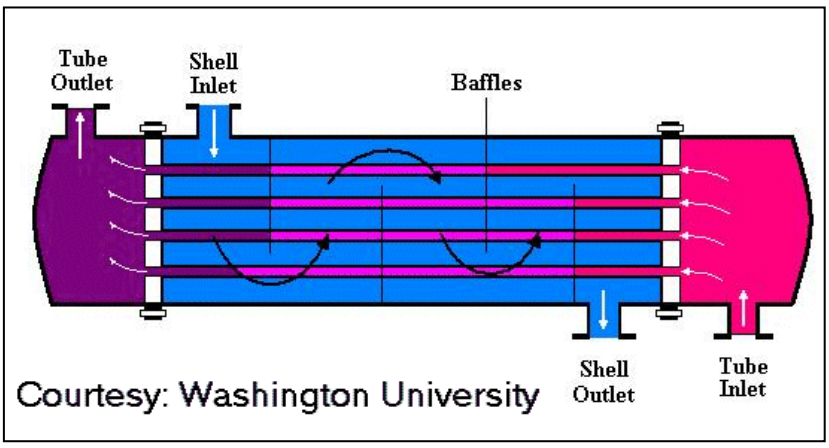

Figure 9: Shell-and-tube heat exchanger flow pattern (Black & White, 2012)

A shell-and-tube heat exchanger can also, further be classified by the number of tube passes, and number of shell passes. The example above is a one-shell-pass and one-tube-pass shell-and-tube heat exchanger (Cengel & Ghajar, 2011).

2.7.3 Condenser

Condensers are a common type of heat rejection equipment. They are used to cool a liquid or gas to a desired temperature, usually during an isobaric process (under steady state conditions). Various types exist including shell type condensers, tube type condensers and direct-contact condensers. The most common types will be discussed further on.

Direct-contact condensers involve the contact between the coolant and the vapour. These are generally low in cost and have simple designs. However, mixing of the vapour and liquid is not always allowed, and this application, is not advised. Direct-contact condenser types include: the spray condenser, the baffled column, the packed column, the jet condenser and the sparge pipe (McNaught, 2011).

1. A spray condenser basically involves the coolant being sprayed into the vessel to which the vapour is supplied from the compressor (McNaught, 2011).
2. A baffled column is similar to a spray compressor; however, the coolant flows over trays in the column. The vapour is supplied to the bottom of the column. This condenser has counter-current flow which ensures better heat transfer (McNaught, 2011).
3. The packed column condenser is comprised of metal rings which increase the interface heat transfer by an increase in area. This condenser is subject to a larger pressure drop (McNaught, 2011).
4. The jet condenser involves a stream of liquid is directed into a vapour stream. This usually 'desuperheats' the vapour. Usually counter-flow is used which increases the heat transfer (McNaught, 2011).
5. A sparge pipe condenser essentially is a tube with holes in where vapour bubbles are injected into the liquid. This is not an efficient condenser due to the inability to distribute equal sized bubbles (McNaught, 2011).

Shell-and-tube condensers are commonly used in industry. There are three main types: cross flow shell-side condenser, baffled shell-and-tube condenser and the tube-side condenser. Shell-and-tube heat exchangers were discussed previously in this chapter.

2.7.4 Evaporator

Two types of evaporators exist in general terms, air coils and liquid chillers (Types of Evaporators, 2011). An evaporator is essentially a piece of equipment which accepts heat. In a vapour compression refrigeration system, the cold fluid moving from the expansion valve to the compressor accepts heat from the warmer fluid exterior to this refrigerant fluid flow. This allows the refrigerant to boil and therefore become gaseous so that it can be compressed.

As stated by Types and applications of evaporators, 2010 (Types and applications of evaporators, 2010) :

"Evaporators are often classified as follows:

1. Separated by means of heating evaporation of liquid heating tube surfaces,
2. Limited by means of heating coils, jackets, double walls, flat plates, etc.,
3. Means of heating put in direct contact with the evaporation of liquid, and
4. Heating with solar radiation."

The most common evaporator is that with heating tube surfaces. The circulation of the liquid over the surface can be accomplished in two ways: natural circulation and forced circulation. These are boiling and mechanical means, respectively. An important aspect of evaporators is that the flow rate stays constant – continuous feed and continuous discharge (Types and applications of evaporators, 2010).

Shell and Tube Evaporator

Shell-and-tube evaporators are a type of shell-and-tube heat exchanger and they are very common in industry. These were discussed previously in this chapter, and thus no further information will be given.

Plate Type Evaporators

Plate type evaporators are used to chill water more commonly nowadays. These evaporators are used because they have high heat transfer coefficients, are small and have low refrigerant charge. The refrigerant feed can be accomplished by a surge drum (flooding); direct expansion and forced liquid overfeed. The figure below shows how a plate type evaporator works (Plate-Type Evaporators, 2011).

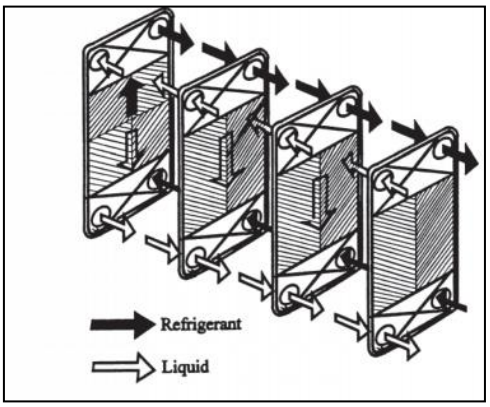

Figure 10: A plate-type liquid chilling evaporator (Plate-Type Evaporators, 2011)

Rising Film Evaporator

This was the first continuous operation evaporator used in food processing. In this system, steam condenses on the outside surface of the vertical tube. Liquid is brought to the boil in the centre of the tube. The fluid moves up the tube and this causes more vapour to form, increasing the centre velocity and forcing the liquid against the surface of the tube. A high vapour velocity causes a thinner, more rapidly rising film, which increases the heat transfer coefficients (Rising Film Evaporator, 2006). The figure below shows a rising film evaporator (Turbinedar Co, Inc., 2009).

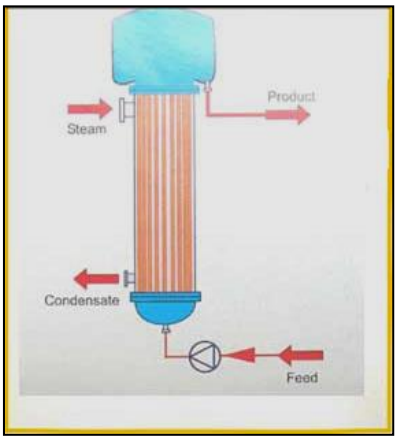

Figure 11: Rising film evaporator (Turbinedar Co, Inc., 2009)

Falling Film Evaporator

A falling tube evaporator consists of long, vertical tubes encompassed in a steam jacket. The solution or feed increases in velocity as it flows downwards along the tubes, with the steam (vapour) flowing inside the tube. Heat then flows from the steam to the solution, and both exit the evaporator at the base. The figure below shows an example of a falling film evaporator (Turbinedar Co, Inc., 2009).

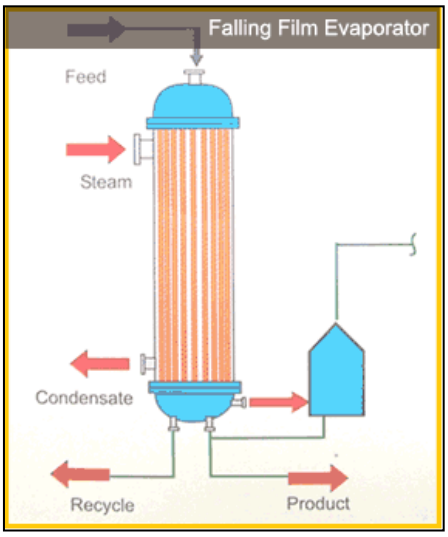

Figure 12: Falling film evaporator (Turbinedar Co, Inc., 2009)

Flash Evaporator

When a saturated liquid flows through a throttling device, there is a pressure drop. This is the main attribute of a flash evaporator, and occurs at the entrance to the evaporator. The liquid can either be a single-component liquid or a mixture of single-component liquids, forming a multi-component liquid. Some of the saturated liquid flashes into vapour immediately as it enters the heat exchanger. The figure below shows an example of a flash evaporator. (Turbinedar Co, Inc., 2009)

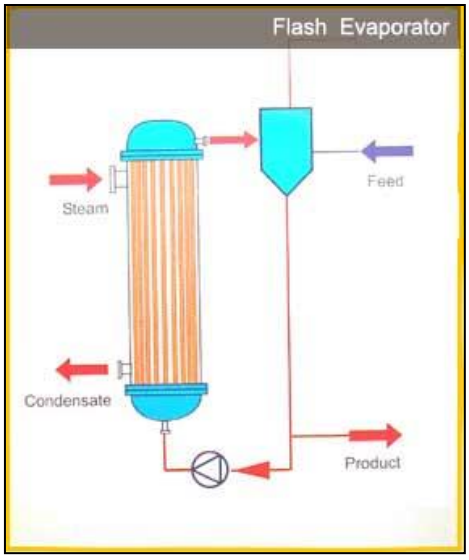

Figure 13: Flash evaporator (Turbinedar Co, Inc., 2009)

Fin type evaporator

Fin type evaporators can have up to five times more surface area than plate type evaporators (Dometic Group). This causes an increase in the heat transfer rate and therefore the efficiency of the evaporator. Even though they have a larger surface area, they take up the same amount of space as a plate type evaporator with the same size. These evaporators are specifically well suited to "large refrigeration capacities and high ambient temperatures" (Dometic Group). The image below shows a fin type evaporator (Changzhou Xinxin Refrigerating Equipment Co., Ltd., 2013).

Figure 14: Fin type evaporator (Changzhou Xinxin Refrigerating Equipment Co., Ltd., 2013)

2.8 Suction Accumulator

Water or liquid can break the crankshaft of the compressor if they enter it and thus a suction accumulator is used to prevent liquid entering it. This problem can also be solved by using a crank case heater. A suction accumulator is a standard component and can be bought off the shelf. Essentially the liquid collects at the base of the accumulator and the vapour exits at the top. Because oil is denser than water, the oil from the lubrication is at the bottom, but some exits with the vapour, through a small hole at the base, due do the shear stresses. Thus, lubrication of the other components is possible. Figure 15 shows an example of a suction accumulator (Shaoxing Tanle Trade Co., Ltd., 2012).

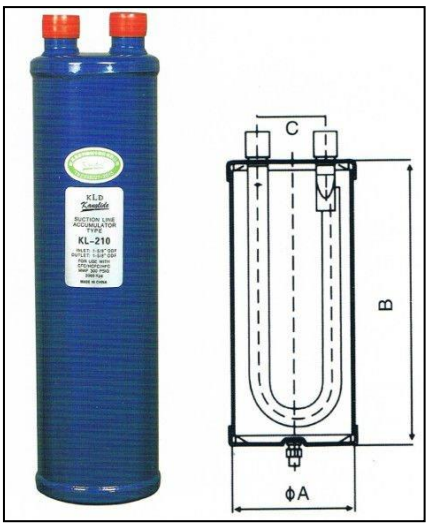

Figure 15: Suction accumulator (Shaoxing Tanle Trade Co., Ltd., 2012)

2.9 Types of Refrigerants

Refrigerants are replaced when less harmful and toxic ones are discovered. Ammonia and sulphur dioxide were used at the start of the use of vapour-compression refrigeration. These are highly toxic and dangerous. Chlorofluorocarbons, commonly known to be a cause of the ozone depletion, were contained in the most common refrigerants used for past years. These substances are stable at ambient temperatures (especially if they lack a hydrogen atom) and this is necessary in a refrigerant. Some refrigerants have shorter atmospheric lifetimes. These do not affect the ozone depletion, as they seldom reach the stratosphere of the atmosphere, where the ozone layer is located. The table below shows the replacement refrigerants (Borgnakke & Sonntag, 2009).

Old Refrigerant	R-11	R-12	R-13	R-22	R-502	R503
Alternative Refrigerant	R-123 R-245fa	R-134a R-152a R-401a	R-23 (low T) CO_2 R-170 (ethane)	NH_3 R-410a	R-404a R-407a R-507a	R-23 (low T) CO_2

Table 2: Alternative refrigerants

According to the Ozone Secretariat, 2011, the Montreal Protocol was designed to reduce the production and consumption of ozone depleting substances in order to reduce their abundances in the atmosphere. This protocol was enforced on 1 January 1989. If a country has signed the agreement, they are subject to make changes to chemicals used, in order to prevent further ozone depletion (Ozone Secretariat, 2011). Some of the alternative refrigerants are discussed below.

R-123 – Refrigerant R-123 is a replacement for R-11 due to the negative effects of R-11 on the ozone layer. R-123 has an ozone depletion potential of 0.02 versus that of R-11, which is 1.0. The global warming potential of R-123 is 120 versus that of R-11 which is 4 600. This shows the vast environmental impact difference between these refrigerants, and in this environmental awareness period, R-123 is a much better option. These refrigerants produce similar pressures and temperatures in a chiller, however, a chiller using R-123 as the refrigerant will have a lower efficiency, and therefore a lower coefficient of performance (A-Gas).

R-245a – This refrigerant shows the best efficiencies out of organic refrigerants, between 380 and 430K. R-245a is a dry refrigerant and therefore does not condense after moving through the compressor or turbine, and therefore higher thermal efficiencies exist (Mago, Chamra, & Somayaji, 2007).

R-134a – R-134a is a wet refrigerant and therefore needs to undergo condensation once it has exited the compressor. The best efficiency for R-134a can be accomplished when operating between temperatures of 330 and 360K. The best efficiency can also be found between pressures of 3.6 and 4.2 MPa. R-134a has the lowest irreversibility of the organic refrigerants and requires the highest mass flow rates (Mago, Chamra, & Somayaji, 2007).

R-152a – Exposure to refrigerant R-152a can be fatal, however, long exposure to R-152a will not occur as once the refrigerant is in the system, it won't be required to be replaced often. It should not be heated above 52°C (National Refrigerants, 2008). In 1999, investigations took place into whether R-152a could replace R-134a, due to its GWP (global warming potential) which is much greater than that of R-152a (1 300 versus 140). For both refrigerants, the ODP (ozone depletion potential) are zero. The saturation curves of R-152a and R-134a are quite similar (Ghodbane, 1999).

R-401a – This refrigerant is stable, however, it should not be mixed with oxygen at pressures above atmospheric (National Refrigerants, 2008).

R-404a – R-404a is a replacement refrigerant for R-502 and R-22, which are chlorofluorocarbons. Because of their negative impact on ozone depletion and global warming, these refrigerants are being phased out. If exposed to high temperatures, this colourless, odourless gas will erupt (Seubert, 2013).

R-410a – R-22 was a very common refrigerant for many years, however, it is a HCFC (hydrochlorofluorocarbon) and is a cause of ozone depletion (but less than conventional CFC's). It also contributes to global warming and the greenhouse effect, both common environmental concerns. Since 2010, R-410a is to replace refrigerant for R-22 and is an HFC. R-410a is a mixture of equal parts HFC-32 and HCF-125. R-410a has a higher vapour pressure than R-22, but both evaporate at similar temperatures. Due to the necessity to reach higher pressures, R-22 equipment cannot be used with R-410a and therefore new equipment has to be designed and built (Advantage Engineering, 2013).

2.10 Fouling Factor

A new concept is that of the fouling factor. This shows how the heat exchangers performance deteriorates with time. This deterioration is as a result of deposits on the heat transfer surfaces. This causes resistance to heat transfer, and thus decreases the rate of heat transfer. This fouling factor R_f, measures the thermal resistance due to fouling.

Fouling can be caused by precipitation of the solid particles on the heat transfer surfaces. In industry, specifically the chemical industry, corrosion and chemical fouling can also be found. Biological fouling occurs when algae grows in the warm fluids. It is important to determine which type of fouling could be apparent in the heat exchanger, depending of the environment in which it is used. Then, a heat exchanger can be selected according to this factor. Typically, a larger heat

exchanger can be used to accommodate for the fouling effect, but these are more expensive. This factor increases with time and is dependent on the environment, velocity and operating temperature. An increase in temperature and decrease in velocity will increase fouling. Table 3 shows representative values for the fouling factor for some common fluids (Cengel & Ghajar, 2011).

Fluid		R_f ($m^2 \cdot K/W$)
Distilled Water, sea-water, river water, boiled feedwater	Below 50°C	0.0001
	Above 50°C	0.0002
Fuel oil		0.0009
Steam (oil-free)		0.0001
Refrigerants (liquid)		0.0002
Refrigerants (vapour)		0.0004
Alcohol vapours		0.0001
Air		0.0004

Table 3: Representative fouling factors

2.11 Selection of Heat Exchangers

It is important to realise, when selecting a heat exchanger that it is better to overdesign than to design to limited specifications. This accommodates for any negative factors that the environment such as the fouling factor, and any unforeseen circumstances. When enhancing a heat exchanger, a higher pressure drop and higher pumping power will exist. This increases the cost of the heat exchanger. Factors which must be taken into consideration when selecting a heat exchanger are: heat transfer rate, cost, pumping power, size and weight, type, materials, and any other considerations (Cengel & Ghajar, 2011). These will be discussed in Chapter 6, Detail Design.

2.12 Conclusion

This literature study has discussed all of the important components for the chiller. Essentially, a thermodynamic approach must be taken to determine the specifications of the standard components: expansion valve, suction accumulator, fan and the compressor. The heat exchangers can then be designed to fit together with these standard components. Heat and mass transfer is also an important aspect.

When deciding on the type of heat exchangers to be used, even though shell-and-tube heat exchangers are the most common, they are not suited to this application as they are too large. A suction accumulator is the decided approach to prevent breaking of the crankshaft. The refrigerant which will be used in this application is R-134a.

Chapter 3

Functional Analysis

3.1Introduction

This chapter discusses the functional analysis of the main components in this system. The components which form the vapour compression cycle are essential to this system. The water will be chilled for aerospace, industrial and air-conditioning applications, through the vapour compression cycle.

3.2 Functional Components

A chiller is a thermodynamic vapour compression system which produces chilled water for air-conditioning, industrial applications and aerospace applications. A chiller is essentially comprised of four main components: compressor, condenser, expansion valve and evaporator. Other components are used in conjunction with these, however, the essential calculations and design of the chiller is determined by the four main components.

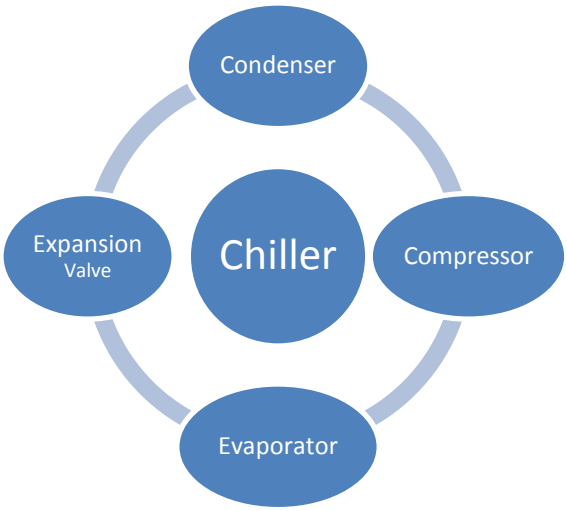

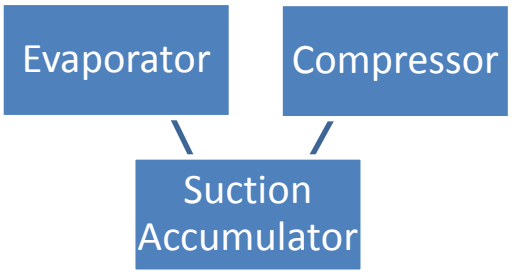

3.3 Condenser

A condenser is a heat exchanger which transfers heat from one fluid to another in order to cool the liquid. With a compressor, heat is usually transferred to the ambient temperature of the surroundings, which can be made cooler due to forced convection from fans. It is within this component, that the refrigerant vapour is converted into liquid form, when considering a refrigeration system. Hot, high pressure refrigerant gas enters the condenser from the compressor. In the condenser it is cooled to liquid. It is important to consider the surface area, as a larger surface area will allow for more heat transfer from the refrigerant, and therefore faster cooling. This can be accomplished with fins on the heat exchanger to increase the surface area (Yeh, 1999). The condenser for this application will be a finned heat exchanger, because only the refrigerant is contained, and the air is ambient air.

3.4 Expansion Valve

The expansion valve is used to accommodate the throttling process, whereby the temperature is decreased in an adiabatic process, and the pressure is decreased abruptly (Borgnakke & Sonntag, 2009). It is essentially a tube or pipe in which a restriction in flow occurs. This decrease in temperature and pressure allows for the evaporator to work effectively. The expansion valve also controls the flow rate of the refrigerant into the evaporator as per load required. This allows for efficiency in the evaporator and the compressor and also prevents the liquid refrigerant from flooding the compressor (Khemani, 2010).

3.5 Evaporator

The evaporator is essential for the chiller, as this component will allow for the heat transfer between the cold refrigerant and the warm water which needs to be cooled. As with the condenser, it is essentially a heat exchanger. Here, the liquid refrigerant is converted into vapour. If fins are used on the evaporator to increase the surface area, and therefore the heat transfer rate, a metal with a high thermal conductivity must be used to maximise this heat transfer (Yeh, 1999). The evaporator for this application will involve two fluids, which need to be contained.

3.6 Compressor

The most common type of compressor used in small refrigeration systems is the reciprocating compressor (Yeh, 1999). It controls the circulation of the refrigerant and increases its pressure, and while doing this, heats it up before it enters the condenser (Fritz, 2013). The compressor essentially pumps the refrigerant through the refrigeration system.

3.7 Suction Accumulator

This is a secondary component to the previous four, and is used to prevent the breakage of the compressor crankshaft. Essentially it allows for only vapour to enter the compressor, and some of the lubrication. This is a standard component.

3.8 Conclusion

The functional analysis of the main components in the vapour compression cycle has been discussed. This vapour compression cycle forms the main part of the chiller, and it is through this, that the water will be chilled.

Chapter 4

Design Requirements and Technical Specifications

4.1 Introduction

This chapter deals with the design requirements and technical specifications. Requirements are ranked and the importance is specified. This allows for the determination of which factors are the most important, and are the driving force behind a specific design.

4.2 Requirements and Specifications

In terms of the full design requirements, some standard components are required. These standard components include: the compressor, pump, expansion valve and fan. The items to be designed for this system are: the two heat exchangers (evaporator and condenser) as well as the condenser distributor and the base plate. The entire system layout must be designed.

Other design requirements exist with respect the total size, total mass, refrigerant, efficiency, and the outlet water temperature. It is also important to consider the ease of manufacturing, cost of manufacturing and maintenance, maintainability and how reliable the chiller is. It must be environmentally friendly and adhere to all legislation and social conducts.

Requirement	Not very Important	Relatively Important	Very Important	Remarks
Size				
Mass				100 kg
Refrigerant				Environmentally friendly
Efficiency				COP = 2.2
Outlet Water Temperature				10°C
Flow rate				1000 l/hr
Manufacturing				
Cost				
Maintenance				
Reliability				
Environmental, legal, social concerns				

Table 4: Design requirements

The size of the chiller is not important as it is determined by the power consumption. However, it needs to fit into spaces typically available for a chiller, and is determined by the power requirement. The mass of the chiller is relatively important because it needs to be moved easily and placed into the selected area. A good mass barrier is 100 kg because this allows for the chiller to be moved easily and would typically fit into available spaces. The mass is affected by the components and the materials used.

The thermodynamic properties are very important for this application. The chiller needs to be efficient, and have a coefficient of performance of 2.2, with an outlet temperature of 10°C. This is to adequately perform the function of chilling the water for air-conditioning, industrial and aerospace applications.

Manufacturing of the components should be simple, however, some complicated components will lead to higher efficiencies, and therefore the manufacturing is dependent on the required outputs. The maintenance should be relatively easy. This means that the components should be easy to reach and simple to replace. Reliability is always a concern, in that if the chiller cannot perform its function, other processes may be stopped, for example, in industry.

Since this is a thesis on a design, cost is not of as much importance as other factors; however, to implement this design into industry, cost will always be a parameter for design. If cost effective efficient chillers exist, it would not be worthwhile to pay double the price for something that is slightly more efficient.

The refrigerant type is important for the chiller design, because since the enforcing of the Montreal Protocol in January, 1989, refrigerants need to be environmentally friendly, and therefore should not contain chlorofluorocarbons. This is to alleviate ozone depletion and stop the contribution of refrigerants to global warming and the greenhouse effect. The refrigerant type is linked to the environmental concerns, which is very important.

4.3 Conclusion

This chapter has dealt with the design requirements and technical specifications for the chiller. The most important factors to consider when designing the chiller are: the refrigerant used, efficiency, outlet water temperature and the flow rate of the chilled water. Concepts can now be drawn up and the best design can be decided upon.

Chapter 5

Concepts

5.1 Introduction

This chapter focuses on the concepts for the design of this chiller. It begins with concept generation. For this process, ideas were thought up for the different components which would need to be designed. A brief discussion is given for each. The next section is concept selection. This includes tables where essentially, the final type of design is decided upon. These tables are used to rank the ideas according to certain requirements such as size, manufacturing, reliability, cost and maintenance.

5.2 Concept Generation

5.2.1 Evaporator

Concept 1

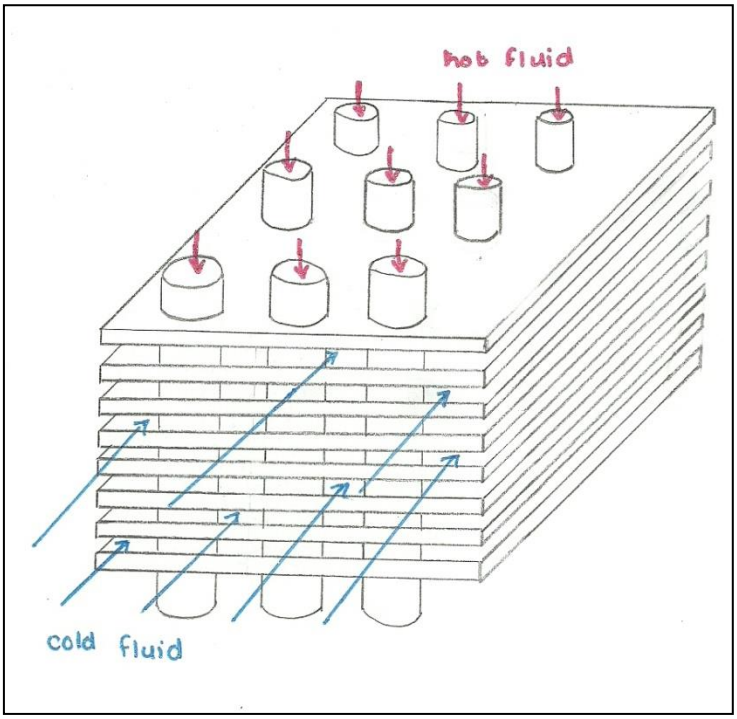

Figure 16: Evaporator concept 1

Concept 1 for the evaporator is a functional design. It involves a plate heat exchanger with perpendicular tubes. The cross-flow of this evaporator will allow for a high heat transfer rate, and a relatively small space requirement. The refrigerant would flow in the tubes, and the water would flow through the plates. Equal dispersion of the fluids is necessary so that water will exit at a constant temperature.

Concept 2

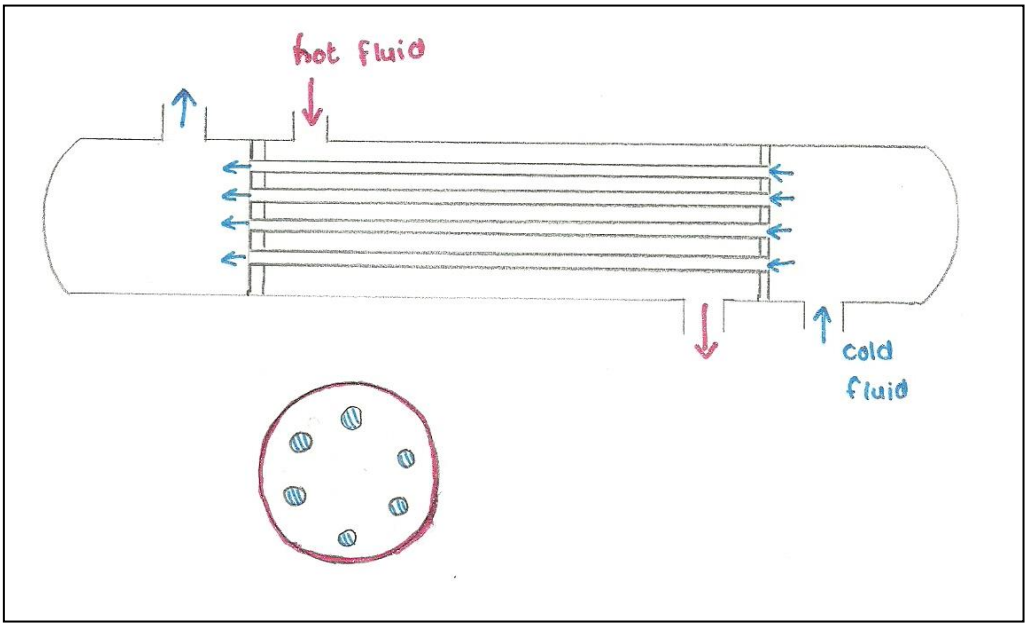

Figure 17: Evaporator concept 2

Concept 2 of the evaporator is essentially a shell-and-tube heat exchanger. This heat exchanger is efficient, and can be either very small or very large, depending on the requirements. The water would flow through the tubes, and the evaporator in the shell.

Concept 3

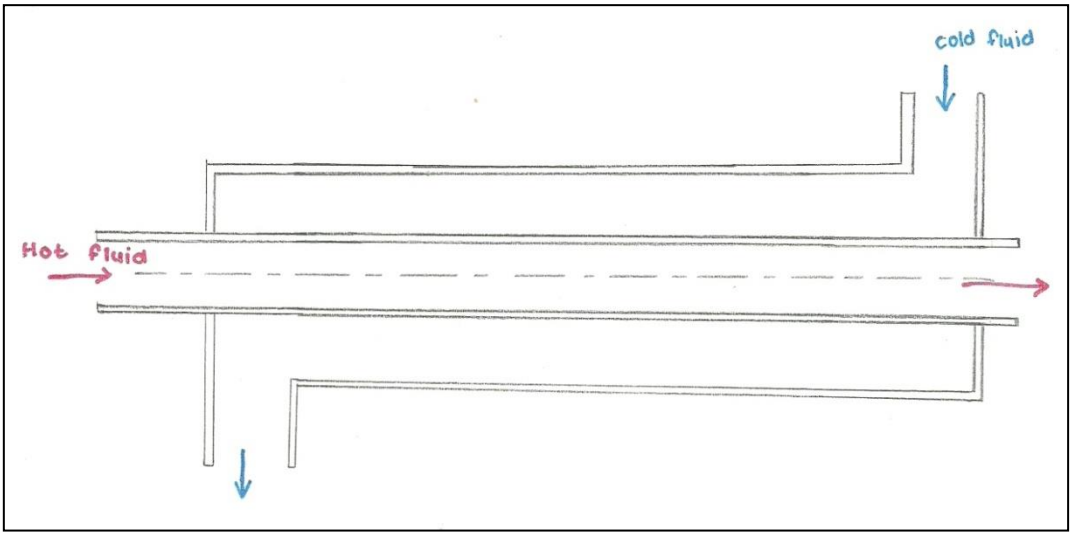

Figure 18: Evaporator concept 3

Concept 3 is a double pipe heat exchanger. This heat exchanger has counter-flow which allows for a high heat transfer rate than parallel flow. A long length of this double pipe heat exchanger will be necessary, and this may not be accommodated in the layout design of the chiller.

Concept 4

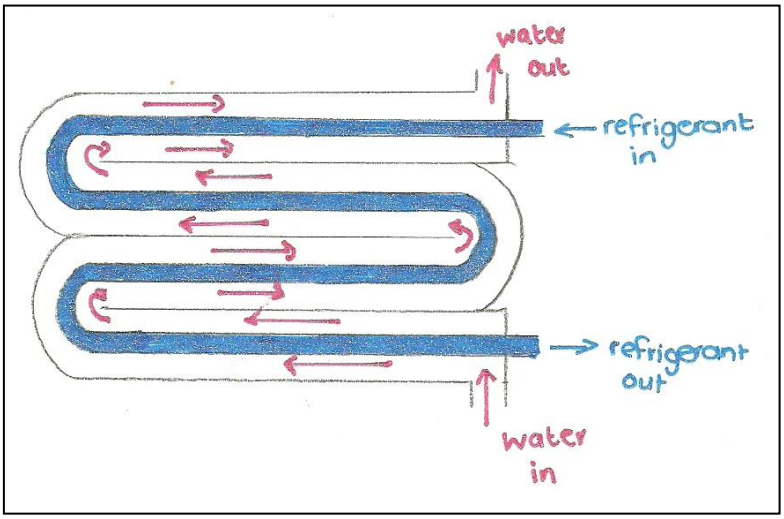

Figure 19: Evaporator concept 4

Concept 4 is a double pipe heat exchanger. The inner and outer tubes are quadruple pass which will allow for a high heat transfer rate due to a larger surface area, and the passes will allow for a more compact design instead of one length of a double pipe heat exchanger of concept 3.

Concept 5

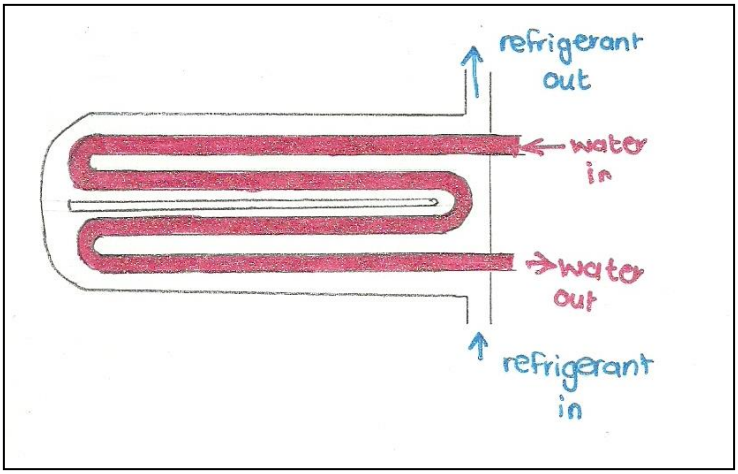

Figure 20: Evaporator concept 5

Concept 5 is similar to concept 4, in that the inner tube is a quadruple pass but the outer tube is a double pass. This evaporator would not be as efficient as concept 4, and the flow of the refrigerant will not be direct.

Concept 6

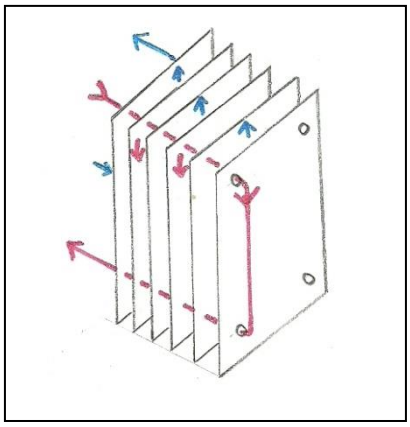

Figure 21: Evaporator concept 6

Concept 6 is a plate heat exchanger. A plate heat exchanger has very effective heat transfer, especially in liquid-to-liquid applications. The cold and hot fluids flow in alternate passages. The contact surface area is large for this heat exchanger, in a small amount of space, in comparison to other heat exchangers.

Concept 7

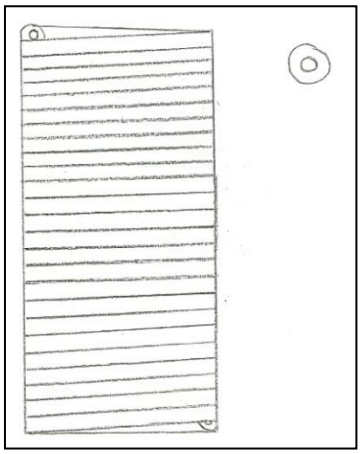

Figure 22: Evaporator concept 7

Concept 7 for the evaporator is the most efficient for the space requirements. A double pipe heat exchanger is essentially wound into a coil which will prevent space wasting and is quite simple to manufacture. Other components can be placed inside the coiled heat exchanger as to minimise total space requirements of the chiller. Counter-flow will be used to increase the heat transfer and thus the efficiency of the evaporator.

5.2.2 Condenser

Concept 1

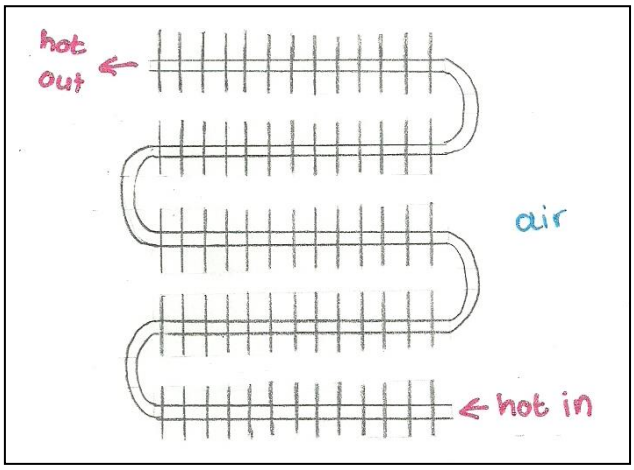

Figure 23: Condenser concept 1

Concept 1 consists of a single tube containing many rectangular fins used to increase the heat transfer surface. The heat from the refrigerant will be transferred to the ambient air through the fins.

Concept 2

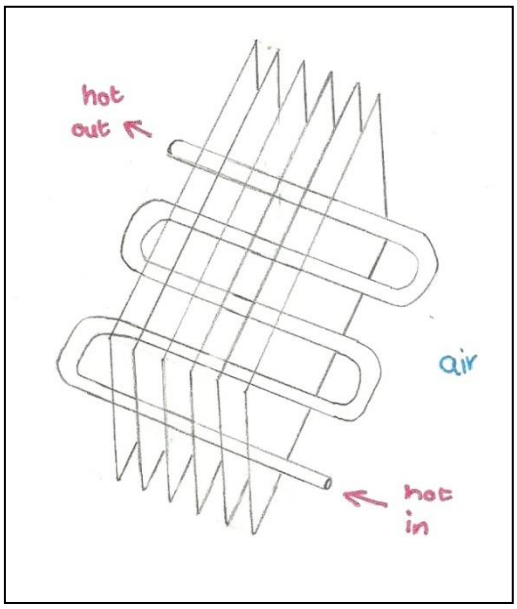

Figure 24: Condenser concept 2

Concept 2 for the condenser is similar to that of concept 1, in that it is a single tube containing fins. These fins, however, are large and the tube makes many cuts through each fin. Fewer fins are necessary, but a large surface area is still obtained.

Concept 3

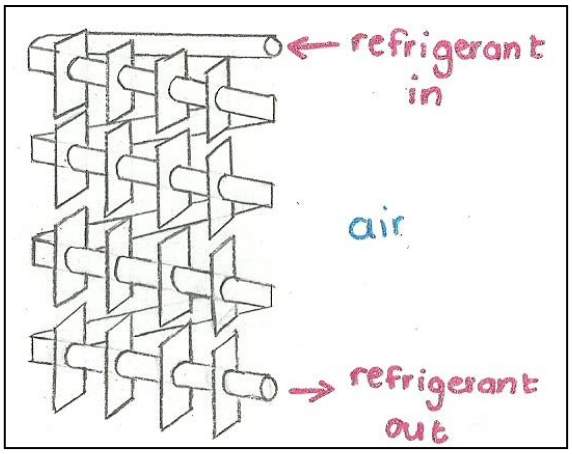

Figure 25: Condenser concept 3

Concept 3 for the condenser involves a helically coiled tube with fins attached around it to increase the heat transfer area. This increases the heat transfer rate. This design is more compact than the previous two due to the helical shape of the tube. For space limitations, this design would be a good option.

Concept 4

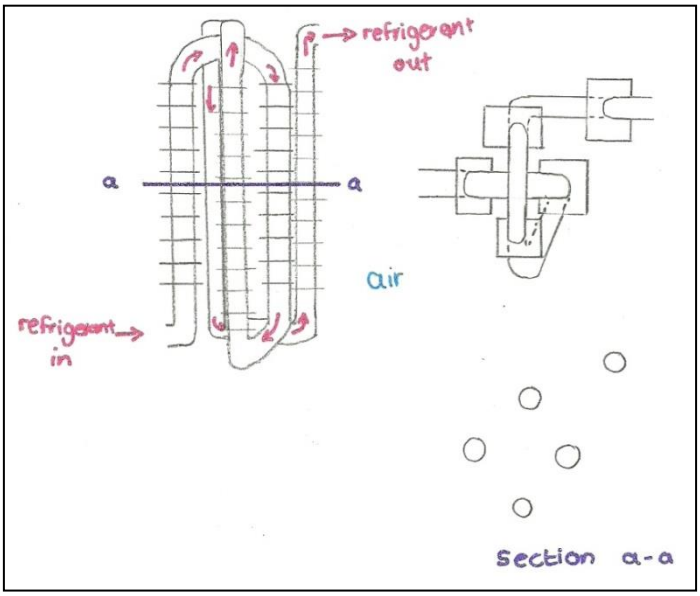

Figure 26: Condenser concept 4

Concept 4 involves intertwined tubes with fins attached. This is a space-saver and still allows for a large surface area used for heat transfer. This means that a high heat transfer rate is possible. This design is difficult to manufacture, due to the placement of the fins. This design can be used vertically or horizontally.

Concept 5

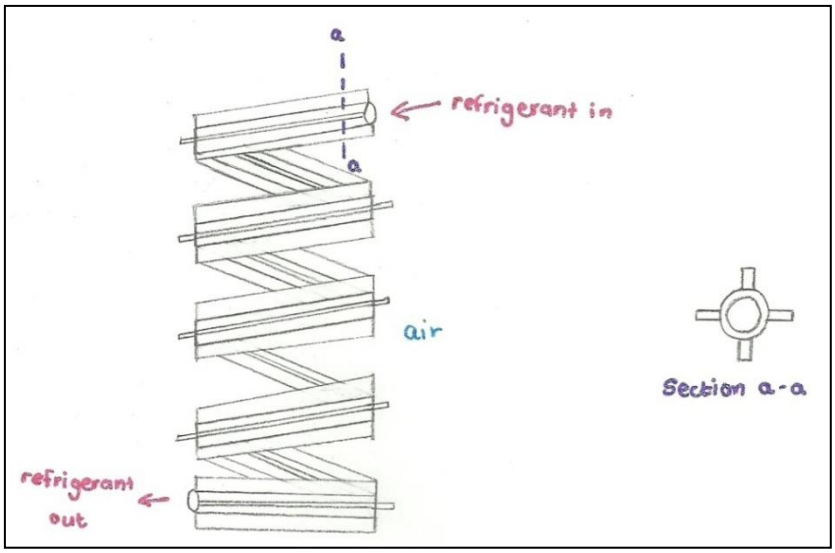

Figure 27: Condenser concept 5

Concept 5 is similar to concept 3, in that it is also a helical tube with fins. The difference, however, is that these fins will go along the length of the tube. Numerous fins can be used, spaced equally apart. This specific one contains four fins along the length of the tube. This will ensure a large surface area, which will allow for a large heat transfer to the ambient air. This design is as compact as concept 3 and concept 4 and therefore will not affect space restrictions.

5.2.3 Container

Concept 1

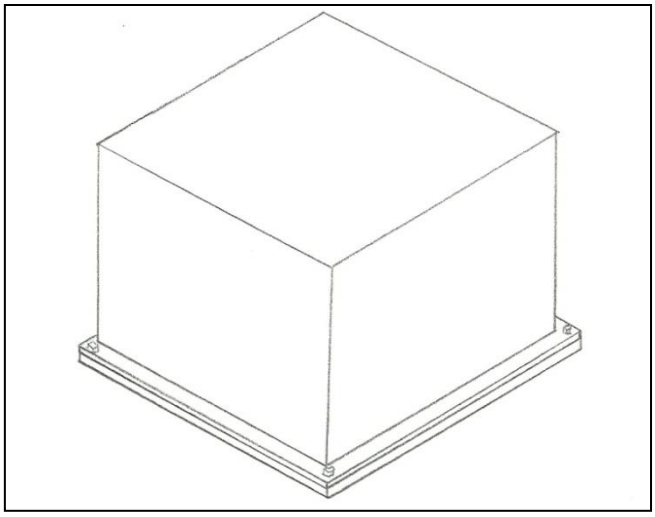

Figure 28: Container concept 1

Concept 1 for the container involves a base to which all of the components will be attached, and a box lid which will cover the entire system. The lid will be bolted to the base. This allows for easy access to the components from all directions.

Concept 2

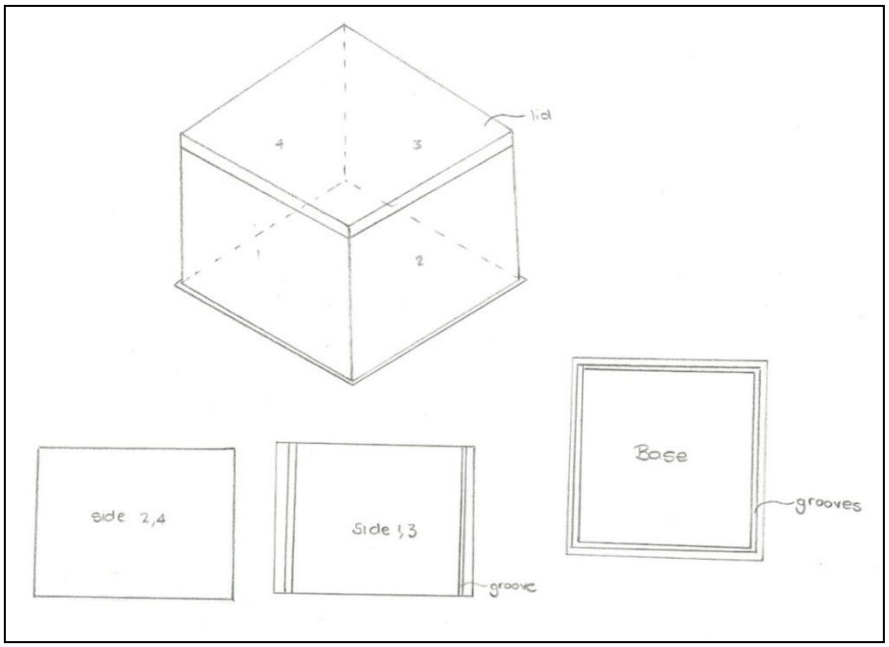

Figure 29: Container concept 2

Concept 2 involves six different pieces which are attached on site, and can be disassembled very easily. Grooves will exist on 3 panels, the base, and two opposite sides. The other two sides will slide into these grooves, and the lid can be placed on top. This design allows for easy access to all components in the system.

Concept 3

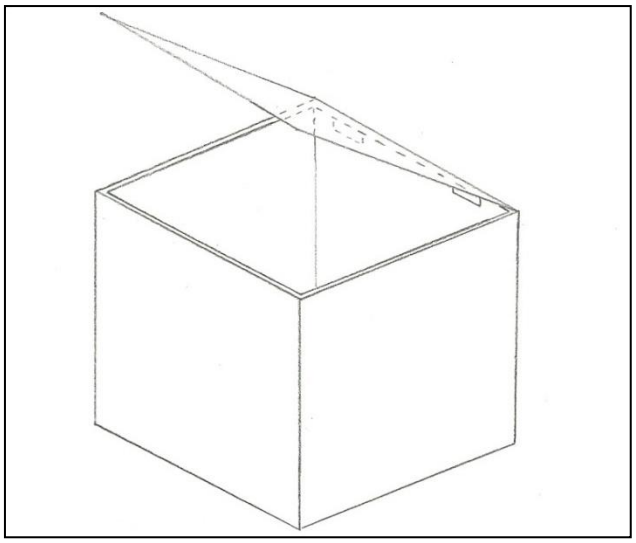

Figure 30: Container concept 3

Concept 3 for the container is essentially a box with a hinged lid. This allows for easy opening and closing of the container. It is difficult to reach the components at the base of the box, and the components will have to be removed for maintenance.

5.2.4 Layout

Concept 1

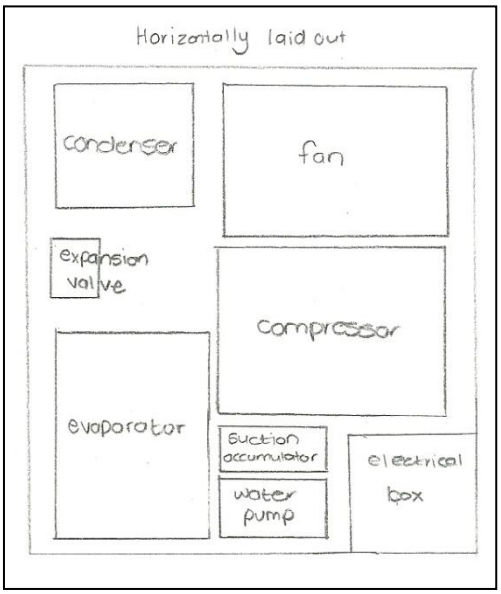

Figure 31: Layout concept 1

This layout is a horizontal layout, for an area with a large base space, but height limitations. The components are all attached to the base of the container. The components are placed specifically so that they are in close proximity to the next component in the system. This reduces additional tubing requirements.

Concept 2

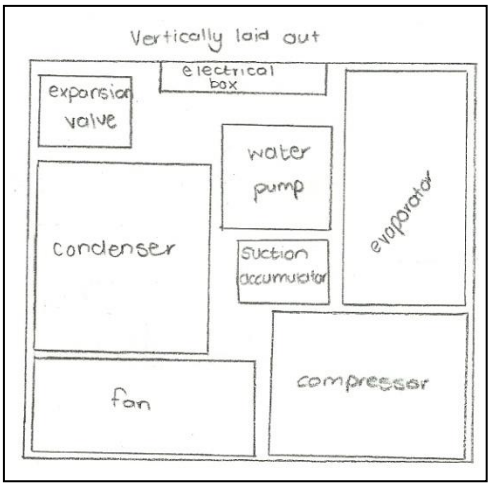

Figure 32: Layout concept 2

This concept is suitable for areas where height is not an issue, but base space is limited. The components are placed on top of one another. This can lead to increased vibrations of the higher components, and instabilities. Once again, the components are placed specifically so that they are in a close region to the next component in the system. This reduces additional tubing requirements.

5.2.5 Condenser connection

Concept 1

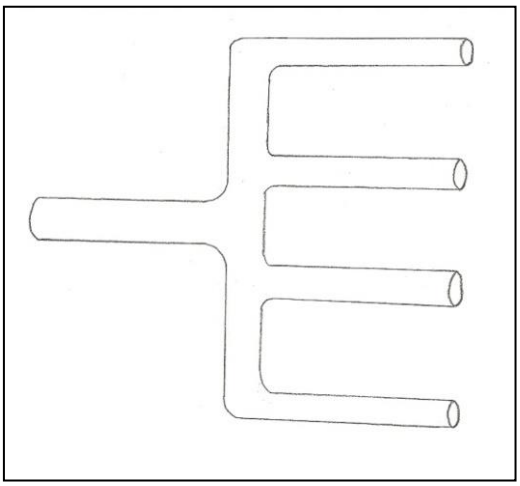

Figure 33: Condenser connection concept 1

Concept 1 for the condenser connection is essentially made of tubes, comprised of three different diameters as to keep the flow rate and velocity constant. The tubes are all on the same plane, and thus only two bends in the flow will occur.

Concept 2

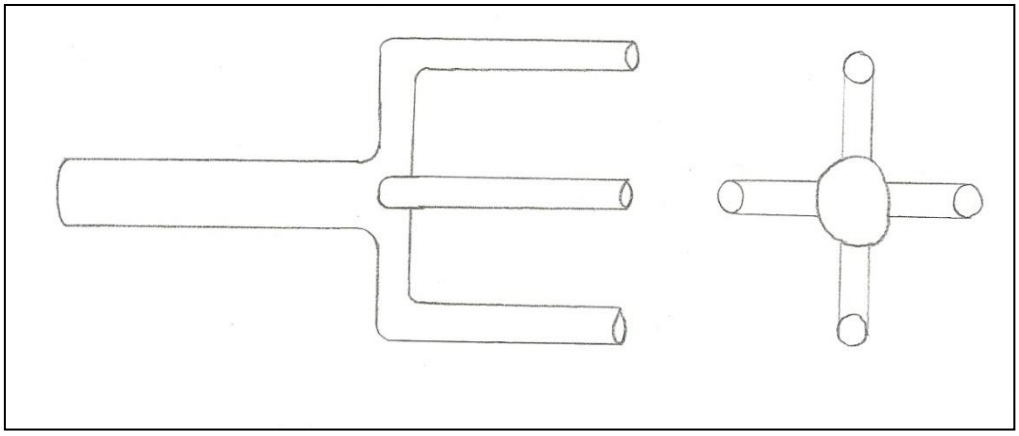

Figure 34: Condenser connection concept 2

Concept 2 for the condenser connection is also made up of tubes with three different diameters as to keep the flow rate and velocity constant. The tubes are on different planes as to keep the connection compact, however, the smallest diameter tubes will then have to make a certain number of turns to eventually start the condenser with all tubes on the same plane.

5.3 Concept Selection

Concepts are graded as either a '1' or a '0'. A '1' means that this criteria is an advantage in the concept, whereas the '0' means that the criteria is a disadvantage. The manufacturability and

efficiency are the most important criteria to consider, and thus, if two concepts are equal, the concept with a point in these areas will be the concept chosen.

5.3.1 Evaporator

Criteria	Concept						
	1	2	3	4	5	6	7
Size	1	0	0	1	1	1	1
Manufacturability	0	0	1	0	0	1	1
Maintenance	0	0	1	1	1	1	1
Reliability	0	1	1	0	0	0	1
Compact	1	0	0	1	1	1	1
Efficiency	1	1	1	1	1	1	1
Total	3	2	4	4	4	5	6

Table 5: Evaporator concept selection

5.3.2 Condenser

Criteria	Concept				
	1	2	3	4	5
Size	0	0	1	1	1
Manufacturability	1	1	0	1	0
Maintenance	1	1	1	1	1
Reliability	0	0	0	0	1
Efficiency	0	0	1	1	1
Compact	1	1	1	1	1
Total	3	3	4	5	5

Table 6: Condenser concept selection

5.3.3 Container

Criteria	Concept		
	1	2	3
Size	1	1	1
Manufacturability	1	1	1
Maintenance	1	1	1
Reliability	1	0	0
Ease of access	1	1	0
Compact	1	1	1
Total	6	5	4

Table 7: Container concept selection

5.3.4 Layout

Criteria	Concept	
	1	2
Size	0	0
Maintenance	1	1
Ease of access	1	0
Compact	1	1
Use of available space	1	1
Total	4	3

Table 8: Layout concept selection

5.3.5 Condenser Connection

Criteria	Concept	
	1	2
Size	1	1
Manufacturability	1	0
Maintenance	0	0
Reliability	1	1
Efficiency	1	1
Compact	0	1
Total	4	4

Table 9: Condenser connection concept selection

5.4 Conclusion

A helical double-pipe heat exchanger will be used for the evaporator, with the warm water flowing in the inside tube, whilst the cold refrigerant flows in the outside tube. This evaporator is easy to manufacture, efficient, and compact. A tube heat exchanger with many fins will be used for the condenser. The amount of fins, tubes and turns will be determined as to minimise space requirements and maximise heat transfer. The container with the removable box lid (concept 1) will be used. This allows for easy access to all of the components in the chiller system, and is easy to manufacture. The condenser connection chosen is that which is on the horizontal plane. This allows for manufacturing to be made as simple as possible.

Chapter 6

Detail Design

6.1 Introduction

This chapter involves the detail design of the chiller, including the necessary calculations done and assumptions made. It is important to understand the processes involved in the chiller system (vapour-compression cycle) which were discussed in Chapter 3.

For this design, it is assumed that steady-state processes exist. Therefore, time-varying effects are not considered, other than when considering the reliability as discussed in Chapter 10. Slight pressure drops which do not have a significant effect will be considered as negligible for this design.

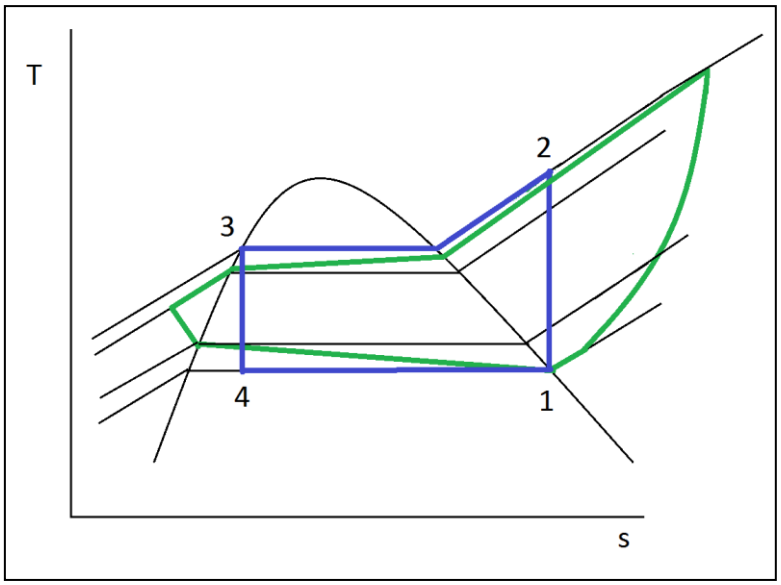

Figure 35: Deviation from the ideal vapour compression cycle

The diagram above shows the deviation from the vapour compression cycle, whereby pressure drops exist over the condenser and evaporator. This is indicated by the green line. Approximately a temperature change of 5°C exists through the expansion valve and the compressor. The blue process shows the vapour compression cycle.

6.2 Thermodynamic Calculations

Specification	Symbol	Value
Mass flow rate	$\dot{m}$	1000l/hr
Inlet temperature (water)	T_i	20°C
Outlet temperature (water)	T_o	10°C

Table 10: Required properties

Power required:

$$\dot{Q} = \dot{m}c_p\Delta T$$
$$= \frac{1000}{3600} \times 4180 \times (20 - 10)$$
$$= 11\,611.11\ W$$
$$= 11.61\ kW$$

When considering an ideal vapour compression cycle:

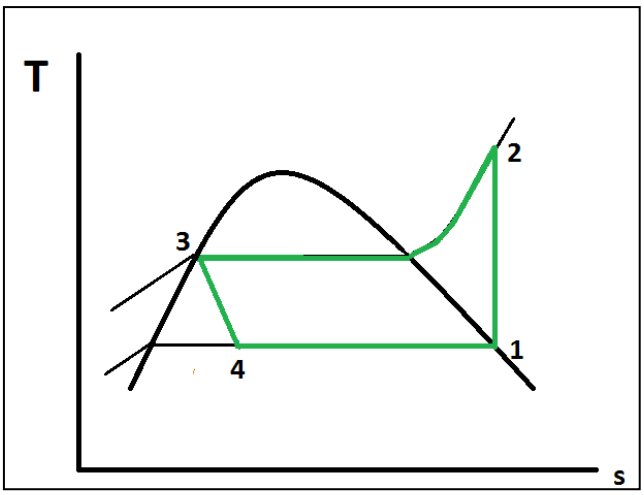

Figure 36: Ideal cycle

<u>Point 1 (saturated vapour):</u>

- $T_1 = 0°C$
- $P_1 = P_{sat} = 294$ kPa
- $h_1 = 398.36$ kJ/kg
- $s_1 = 1.7262$ kJ/kg

<u>Point 2 (superheated vapour):</u>

- $T_2 = 38.4017°C$
- $P_2 = P_3 = 887.6$ kPa
- $h_2 = 421.23$ kJ/kg
- $s_2 = s_1 = 1.7262$ kJ/kg (ideal process)

<u>Point 3 (saturated liquid):</u>

- $T_3 = 35°C$ (assumed condensation temperature)
- $P_3 = P_{sat} = 887.6$ kPa
- $h_3 = h_f = 249.1$ kJ/kg (via interpolation)
- $s_3 = s_f = 1.1673$ kJ/kg (via interpolation)

<u>Point 4 (saturated):</u>

- $T_4 = 0°C$
- $P_4 = P_{sat} = 294$ kPa
- $h_4 = h_3 = 249.1$ kJ/kg
- $x = 0.24753$
- $s_4 = 1.1791$ kJ/kg

$$\dot{Q}_L = \dot{m}(h_1 - h_4)$$
$$= 11.616\ kW$$

$$\dot{m} = \frac{\dot{Q}_L}{(h_1 - h_4)} = \frac{11.616}{398.36 - 249.1}$$
$$= 0.0778\ kg/s$$

$$\dot{W}_C = \dot{m}(h_2 - h_1)$$
$$= 0.0778(421.23 - 398.36)$$
$$= 1.78\ kW$$

$$\dot{Q}_H = \dot{m}(h_2 - h_3)$$
$$= 0.0778(421.23 - 249.1)$$
$$= 13.396\ kW$$

When considering the real cycle:

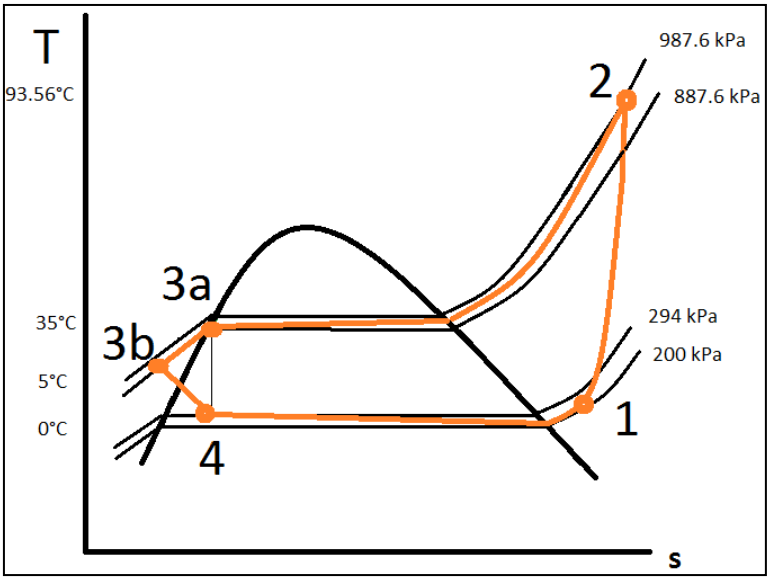

Figure 37: Real cycle

<u>Point 1 (superheated vapour):</u>

- $T_1 = 5°C$
- $P_1 = P_{sat} = 200$ kPa (Pressure drop of 94 kPa across the evaporator)
- $h_1 = 405.205$ kJ/kg
- $s_1 = 1.78015$ kJ/kg

<u>Point 2 (superheated vapour):</u>

Isentropic compressor:

- $s_2 = s_1 = 1.78015$ kJ/kg
- $P_2 = P_3 = 987.6$ kPa
- $h_{2S} = 441.029$ kJ/kg
- $T_{2S} = 58.97$ °C

Assuming an isentropic compressor efficiency: $\eta_s = 0.5$

$$\eta_{c,S} = \frac{h_{2S} - h_1}{h_2 - h_1}$$

$$h_2 = \frac{h_{2S} - h_1}{\eta_{c,S}} + h_1$$
$$= \frac{441.029 - 405.205}{0.5} + 405.205$$
$$= 476.853 \frac{kJ}{kg}$$

Real compressor:

- T_2 = 93.56 °C (interpolation)
- $P_2 = P_3$ = 987.6 kPa (Pressure drop of 100 kPa across the condenser)
- h_2 = 476.853 kJ/kg
- s_2 = 1.88273 kJ/kg (interpolation)

Point 3a (saturated liquid):

- T_{3a} = 35°C (assumed condensation temperature)
- $P_{3a} = P_{sat}$ = 887.6 kPa
- $h_{3a} = h_f$ = 249.1 kJ/kg (via interpolation)
- $s_{3a} = s_f$ = 1.1673 kJ/kg (via interpolation)

Point 3b (sub-cooled liquid):

- T_{3b} = 5°C (assumed)
- P_{3b} = 887.6 kPa
- $h_{3b} = h_f$ = 206.75 kJ/kg
- $s_{3b} = s_f$ = 1.0243 kJ/kg

Point 4 (saturated):

- T_4 = 0°C
- $P_4 = P_{sat}$ = 294 kPa
- $h_4 = h_3$ = 249.1 kJ/kg
- x = 0.24753
- s_4 = 1.1791 kJ/kg

$$\dot{Q}_L = \dot{m}(h_1 - h_4)$$
$$= 11.616\ kW$$

$$\dot{m} = \frac{\dot{Q}_L}{(h_1 - h_4)}$$
$$= \frac{11.616}{405.205 - 249.1}$$
$$= 0.0744\ kg/s$$

$$\dot{W}_C = \dot{m}(h_2 - h_1)$$
$$= 0.0744(476.853 - 405.205)$$
$$= 5.33\ kW$$

$$\dot{Q}_H = \dot{m}(h_2 - h_{3b})$$
$$= 0.0744(476.853 - 206.75)$$
$$= 20.099\ kW$$

The compressor available has a cooling capacity of 12.15 kW, with a power input of 3.66 kW. The evaporating temperature is 0°C, and the condensing temperature is 40°C.

Point 1 (superheated vapour):

- T_1 = 10°C
- $P_1 = P_{sat}$ = 294 kPa
- h_1 = 407.3098 kJ/kg
- s_1 =1.758846 kJ/kg

Point 2 (superheated vapour):

$$h_2 = \frac{\dot{W}_c}{\dot{m}} + h_1$$
$$= \frac{3.66}{0.080586} + 407.3098$$
$$= 452.727\ kJ/kg$$

- T_2 = 93.56 °C (interpolation)
- $P_2 = P_3$ = 1017 kPa
- h_2 = 457.727 kJ/kg
- s_2 = 1.88273 kJ/kg (interpolation)

Point 3 (saturated liquid):

- T_3 = 40°C
- P_3 = 1017 kPa
- $h_3 = h_f$ = 256.54 kJ/kg
- $s_3 = s_f$ = 1.1909 kJ/kg

Point 4 (saturated):

- T_4 = 0°C
- $P_4 = P_{sat}$ = 294 kPa
- $h_4 = h_3$ = 256.54 kJ/kg
- x = 0.285037
- s_4 = 1.207 kJ/kg

$$\dot{Q}_L = \dot{m}(h_1 - h_4)$$
$$= 12.15\ kW$$

$$\dot{m} = \frac{\dot{Q}_L}{(h_1 - h_4)}$$
$$= \frac{12.15}{407.3098 - 256.54}$$
$$= 0.080586\ kg/s$$

$$\dot{Q}_H = \dot{m}(h_2 - h_3)$$
$$= 0.080586(452.727 - 256.54)$$
$$= 15.81\ kW$$

6.3 Condenser

6.3.1 Tube

The refrigerant in the condenser loses heat to the surroundings at a rate of 15.81 kW. The fins and the layout of the condenser must allow for this. The fan allows for forced convection along with the conduction on the fin and tube surface. At the operating temperature of 40°C for the refrigerant fluid, the following properties, which can be found in Table A-10 (Cengel & Ghajar, 2011), exist:

Property	Units	Liquid	Vapour
Thermal Conductivity (k)	W/m·K	0.0757	0.0161
Density (ρ)	kg/m^3	1147	50.08
Specific Heat (c_p)	J/kg·K	1498	1138
Prandtl Number (Pr)		3.285	0.995
Dynamic Viscosity (μ)	kg/m·s	1.66 x10^{-4}	1.408 x10^{-5}

Figure 38: R-134a properties at 40°C

$$\dot{Q}_H = \dot{m}(h_2 - h_3)$$
$$= 0.080586(452.727 - 256.54)$$
$$= 15.81\ kW$$

Assuming a mass flux of 351 kg/m^{2}s, the maximum pressure drop gradient is found to be about 8 kPa per meter for a vapour quality of 0.85. For a vapour quality of 0.5, the pressure drop gradient is 6 kPa/m. This result is negligible, considering the condenser and evaporator will be relatively small and a drop of 6 kPa can be overcome (Grauso, Mastrullo, Mauro, Thome, & Vanoli, 2013). However, a smaller pressure drop exists for a mass flux of 200 kg/m^{2}s at a vapour quality of 0.5. At this mass flux, the pressure drop is approximately 1.5 kPa which is negligible (Lips & Meyer, 2012). Therefore a mass flux of 200 kg/m^{2}s is assumed for this system. At this mass flux, at a maximum inclination angle of 90°, the pressure drop for a mass flux of 200 kg/m^{2}s, the pressure drop is approximately 5 kPa (Lips & Meyer, 2012). This is less than that for no inclination angle at a mass flux of 351 kg/m^{2}s, and therefore a mass flux of 200 kg/m^{2}s is a better assumption. The angle of inclination can thus be changed if necessary, with negligible effects on the pressure drop.

$$\dot{G} = \frac{\dot{m}}{A}$$

$$\begin{aligned} A &= \frac{\dot{m}}{\dot{G}} \\ &= \frac{0.080586}{200} \\ &= 4.0293 \times 10^{-4}\ m \end{aligned}$$

$$\begin{aligned} d &= \sqrt{\frac{4}{\pi} \times \frac{\dot{m}}{\dot{G}}} \\ &= 0.02265\ m \end{aligned}$$

The diameter of the tube is 22.65 mm. Standard aluminium tubing exists in a size 25.4x1.22 mm. This means that the inner diameter of the tubing is 22.96 mm (EuroSteel, 2006).

The velocity is

$$\begin{aligned} V &= \frac{\dot{m}}{\rho A} \\ &= \frac{0.080586}{1147 \times 4.14 \times 10^{-4}} \\ &= 0.1697\ m/s \end{aligned}$$

The Reynolds number is:

$$\begin{aligned} Re &= \frac{\rho V D}{\mu} \\ &= \frac{1147 \times 0.1697 \times 0.02378}{1.66 \times 10^{-4}} \\ &= 27\ 884 \end{aligned}$$

As can be seen from the Reynolds number calculated above, the flow is turbulent (White, 2011). This turbulent flow is fully developed because the developing region is usually 10 tube diameters, which in comparison to the total length of the tube is minimal, and thus the flow can be assumed as fully developed (Cengel & Ghajar, 2011).

The friction factor can be calculated using the Haaland equation, which is within two percent of the Colebrook equation (does not require iterations as with the Colebrook equation):

$$\frac{1}{\sqrt{f}} \cong -1.8\log\left(\frac{6.9}{\mathrm{Re}} + \left(\frac{\epsilon/D}{3.7}\right)^{1.11}\right)$$

The tube through which the refrigerant will flow is smooth, and thus:

$$\epsilon = 0$$

Therefore the Haaland equation is reduced to:

$$\frac{1}{\sqrt{f}} \cong -1.8\log\left(\frac{6.9}{\mathrm{Re}}\right)$$

$$f = \left[\frac{1}{-1.8log\left(\frac{6.9}{Re}\right)}\right]^2$$

$$= \left[\frac{1}{-1.8log\left(\frac{6.9}{27884}\right)}\right]^2$$

$$= 0.02373$$

For: 0.7 ≤ Pr ≤ 160; Re > 10 000

The Nusselt number can be calculated by (for liquid refrigerant):

$$Nu = 0.023Re^{0.8}Pr^{1/3}$$

$$= 0.023 \times 27884^{0.8} \times 3.285^{1/3}$$

$$= 123.08$$

It is assumed that the flow will be split into seven channels at the condenser. The area is constant, to assume a mass flux of 200 kg/m^{2}s and thus the diameters of the five tubes can be calculated as:

$$A_{Large-tube} = 5 \times A_{small-tube} = 4.441 \times 10^{-4}$$

$$A_{small-tube} = \frac{4.441 \times 10^{-4}}{5}$$

$$= 8.8826 \times 10^{-5}$$

$$d = \sqrt{\frac{4}{\pi} \times A_{small-tube}}$$

$$= 0.0106\, m$$

The diameter of each of the five smaller tubes is 10.6 mm. A standard size for aluminium tubing is 12.7x1.22 mm. This means that the inner diameter of the tube is 10.26 mm (EuroSteel, 2006).

The velocity is:

$$V = \frac{\dot{m}}{\rho A}$$
$$= \frac{0.080586 \div 5}{1147 \times 8.267 \times 10^{-5}}$$
$$= 0.17\ m/s$$

The Reynolds number is:

$$Re = \frac{\rho V D}{\mu}$$
$$= \frac{1147 \times 0.17 \times 0.01026}{1.66 \times 10^{-4}}$$
$$= 12\ 052$$

Once again, it can be seen that the flow in these smaller diameter tubes is fully developed turbulent flow.

6.3.2 Fins

When considering the fins for the condenser, it is important to recognise that a metal with a high thermal conductivity is necessary. For this application of the chiller, the mass is a factor which needs to be taken into consideration, and therefore a metal with a lower density is preferred. The table below shows a comparison between some possible fin materials (Cengel & Ghajar, 2011).

Metal	Density ρ [kg/m^3]	Thermal Conductivity k [W/m·K]
Aluminium (pure)	2 702	237
Aluminium 6061-T6	2 700	167
Beryllium	1 850	200
Copper (pure)	8 933	401
Gold	19 300	317
Silver	10 500	429

Table 11: Properties for different metals

It can be seen from this table that the thermal conductivity typically increases with density for these metals. Copper, gold and silver, have high thermal conductivities, however, they are denser, and therefore cannot be used. Gold and silver are also expensive. Aluminium is more accessible and therefore a better option than Beryllium, and has a higher thermal conductivity.

The fins that will be used are rectangular fins. The geometry of these fins is given in Figure 39.

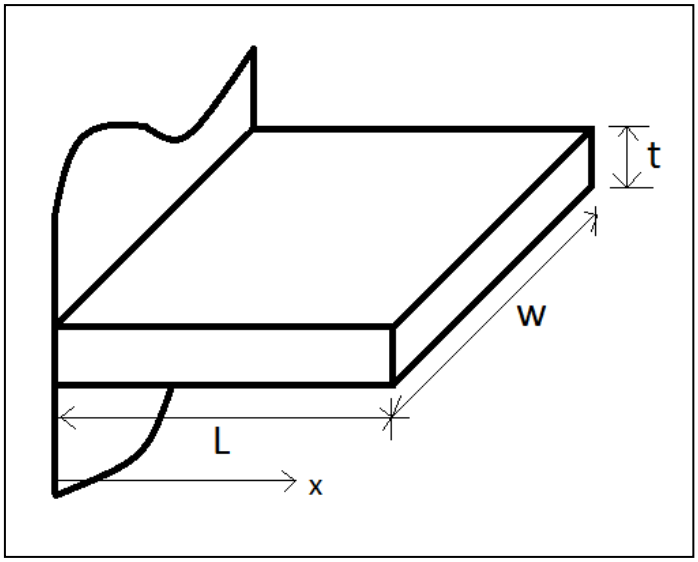

Figure 39: Rectangular fin

The properties of air were taken to be at a temperature of 20°C and a pressure of 1 atmosphere. These properties were found in Table A.15 (Cengel & Ghajar, 2011).

Property	Units	Value
Density [ρ]	Kg/m^3	1.204
Thermal conductivity [k]	W/m·K	0.02514
Dynamic Viscosity [μ]	Kg/m·s	1.825x10-5
Kinematic Viscosity [ν]	m^2/s	1.516x10-5
Prandtl Number [Pr]		0.7309

Table 12: Properties of air

$$Re = \frac{\rho V L}{\mu} = \frac{VL}{\nu}$$

$$Nu = 0.664 Pr^{\frac{1}{3}} Re^{\frac{1}{2}} \quad Pr > 0.6$$

$$\therefore h = 0.664 Pr^{\frac{1}{3}} \frac{k}{L} \sqrt{\frac{VL}{\nu}}$$

Straight rectangular fins, with negligible heat loss from the fin tip will be used. The heat loss from the fin tip can be assumed as negligible because heat transfer from the fin is proportional to the surface area of the fin, and the area of the fin tip is minute in comparison to the total surface area of the fin.

$$\dot{Q}_{adiabatic\ tip} = \sqrt{hpkA_c}(T_b - T_\infty)\tanh(\mathrm{mL})$$

Where T_b is the temperature at the fin base, and p, A_c and m are defined as:

$$p = w \times t \qquad (perimeter)$$

$$A_c = 2wL$$

$$m = \sqrt{\frac{2h}{kt}}$$

Obviously, the larger the fin, the more heat transfer will occur, however, due to space limitations, the heat transfer needs to be minimized.

$$\dot{Q}_{adiabatic\ tip} = \sqrt{0.664 Pr^{\frac{1}{3}} \frac{k}{L} \sqrt{\frac{VL}{\nu}} (w \times t\,) k\big(2w(L)\big)(T_b - T_\infty) \tanh\left(\sqrt{\frac{2\left(0.332 Pr^{\frac{1}{3}} \frac{k}{L} \sqrt{\frac{VL}{\nu}}\right)}{kt}} (L)\right)}$$

Different cases were used, to depict the effect of length, width and thickness of the fins on the heat transfer. The velocity of the air is constant, and was chosen as 2.5 m/s. This value will not affect the general shape of the graph, and was used to show the geometry effects. The difference in temperature (T_b-T_∞) was chosen as unity, as the effect of this will change the graphs by a factor of the difference. This will therefore not affect the general shape of the graph and was used to show the geometric effects as well.

When keeping the length of the fins at a constant dimension of 40 mm, the heat transfer from each fin was found between thicknesses of 0.2 mm and 1.1 mm and between widths of 2 mm and 40 mm.

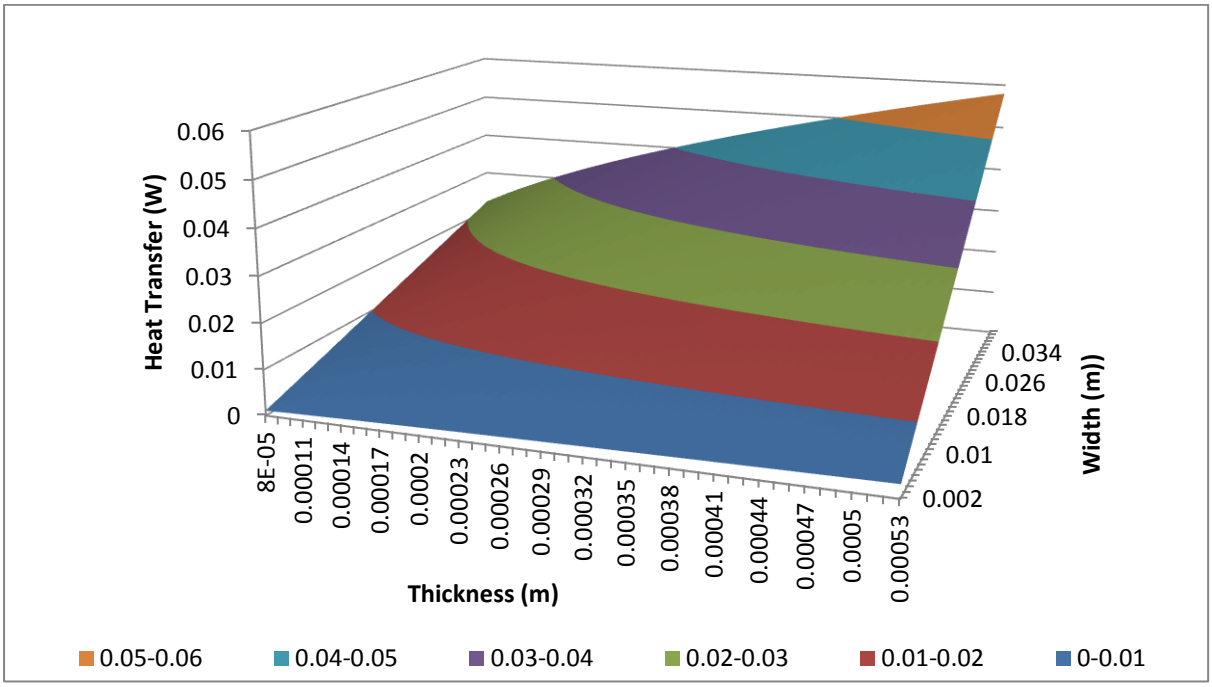

Figure 40: Fin heat transfer when length is constant

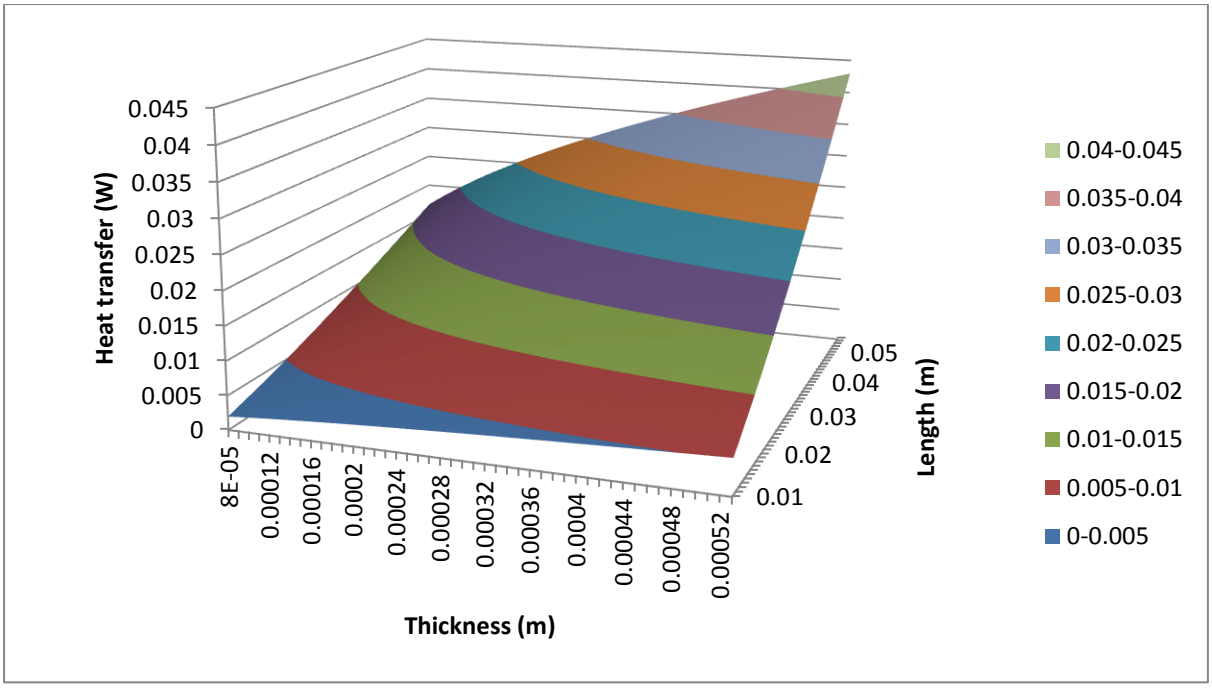

Figure 41: Fin heat transfer when width is constant

A better form of finding the fin heat transfer with for different dimensions is to keep the thickness constant. Often, for air-conditioning applications, the fins are very thin. For this reason, the fin thickness was chosen to be 0.5 mm. When keeping the thickness constant at 0.5 mm, and using a range of 10 mm to 55 mm for the length and a range of 2 mm to 40 mm for the width, the following heat transfer plot was found:

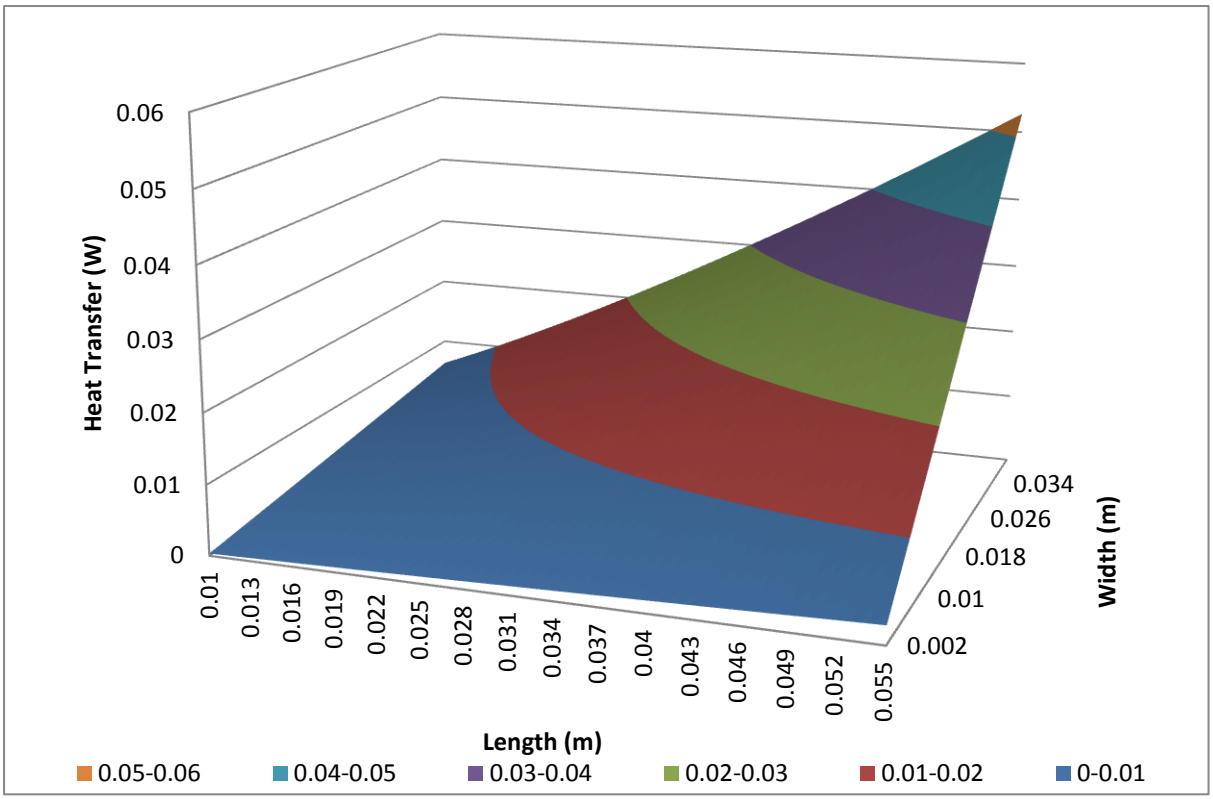

Figure 42: Fin heat transfer when thickness is constant

A better option is to have solid fins which go along the length of the pipe, as with Concept 5 of the condenser. This means that the width of the fins is constant, and the thickness and length can be plotted to determine the maximum heat transfer. Once again, as expected, the maximum heat transfer from the fins occurs when the largest surface area exists. Due to space limitations, the surface area has to be minimal, whilst still ensuring a maximum heat transfer. These are contradictory and therefore a medium has to be settled for. The problem with these fins is that alignment may be difficult, and everything has to be manufactured to exact precision which is not always possible. Therefore many smaller fins will be placed along the length of the tubes.

The material of the fins and the tube are aluminium. This is a material with a high thermal conductivity and a low density. It is therefore a good material for this application. The heat loss from the tube and the fin must be equal to 15.81 kW, Q_H for the system. The total heat transfer from the condenser is given by:

$$\dot{Q}_{condenser} = \dot{Q}_{tube} + N\dot{Q}_{fin}$$

Where 'N' is the number of fins along the length of the tube.

The heat transfer coefficient of air for forced convection lies in the range of 10 – 200 $W/m^2 \cdot K$ (Convective Heat Transfer).

The fins will be placed along the tubes, and therefore the regions where the fins are connected will not be subject to convection heat transfer to the air. Therefore the heat loss to the air from the tubes is neglected. Because in real life, the tubes will be subject to heat transfer, the efficiency will be greater and so this is not a problem. Fins with a length of 70 mm, width of 60 mm and thickness of 0.5 mm will be used.

Where T_b is the temperature at the fin base, and p, A_c and m are defined as:

$$\begin{aligned} p &= w \times t \\ &= 0.06 \times 0.0005 \\ &= 3 \times 10^{-5}\ m^2 \end{aligned}$$

$$\begin{aligned} A_c &= 2wL \\ &= 2 \times 0.05 \times 0.07 - \left(\pi \times \frac{0.01013^2}{4}\right) \\ &= 0.015992\ m^2 \end{aligned}$$

The heat transfer from the fins can be calculated as:

$$\begin{aligned} \dot{Q}_{adiabatic\ tip} &= \sqrt{hpkA_c}(T_b - T_\infty)\ tanh(mL) \\ &= 2.00775\ \mathrm{W} \\ &\cong 2.07\ W\ per\ fin \end{aligned}$$

The condenser will be composed of a tube which divides into seven equal smaller tubes. These tubes will make six bends. The horizontal length of each tube section will be 650 mm long, which will then feed into a 100 mm diameter bend. A schematic of one of the smaller tubes is given below.

The number of fins can be calculated by:

$$\dot{Q}_{condenser} = \dot{Q}_{tube} + N\dot{Q}_{fin}$$

$$\begin{aligned} N &= \frac{\dot{Q}_{condenser}}{\dot{Q}_{fin}} \\ &= \frac{15\,810}{2.07} \\ &= 7\,333.33\ fins \end{aligned}$$

The number of fins per tube length (65 cm) will then be:

$$\begin{aligned} N_{tube\ length} &= \frac{7333.33}{7 \times 5} \\ &= 209.52\ fins \end{aligned}$$

Therefore 215 fins will be used per tube length to increase the efficiency of the condenser. The fins can be placed 2.5 mm apart. A total of 7 525 fins will be used.

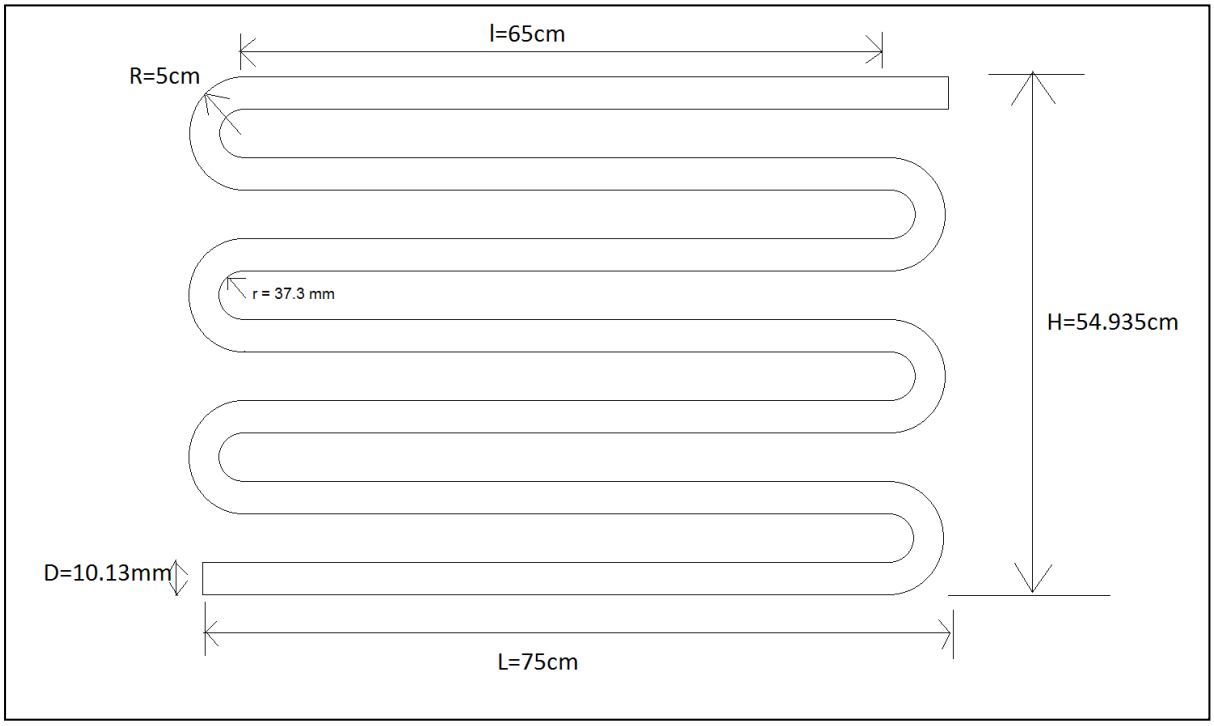

Figure 43: Schematic of condenser

The width of the condenser will be 500 mm, containing five columns, and seven rows of tubes. Each tube will be separated by 100 mm, centre-to-centre distance.

The fin efficiency is defined as:

$$\begin{aligned} \eta_{fin} &= \frac{\tanh(mL_c)}{mL_c} \\ &= \frac{0.9989}{3.75} \\ &= 0.26637 \\ &= 27\% \end{aligned}$$

Although this is not a high efficiency, the surface area of the fins is minimised, which is also an important factor in this design. The fins are 70 mm x 60mm x 0.005 mm. The aluminium sheets are 2500 mm x 1250 mm x 0.0005 mm. This means that each aluminium sheet provides 700 fins. Therefore 11 sheets are needed.

6.3.3 Tube Banks

When considering flow across tube banks, for the in-line application,

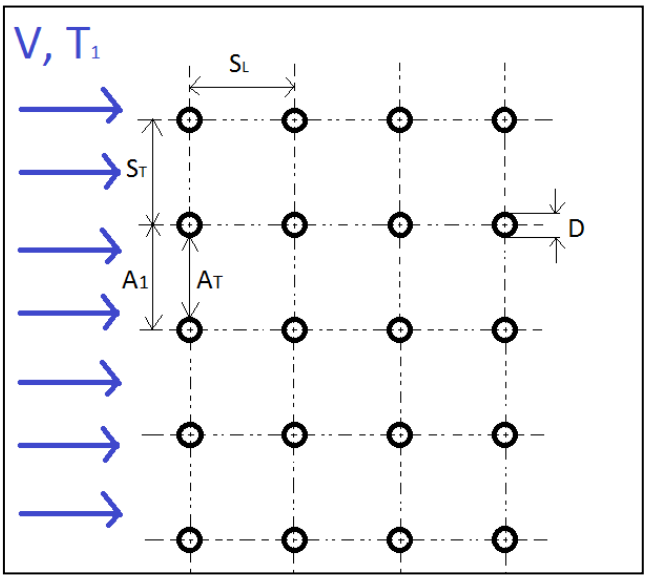

Figure 44: In-line tube bank

Flow area before entering tube bank: $A_1 = S_T L = 0.0873 \times 0.65 = 0.056745\ m^2$

Flow area between the tubes: $A_T = (S_T - D)L = (0.0873 - 0.0127) \times 0.65 = 0.04849\ m^2$

Maximum velocity: $V_{max} = \frac{S_T}{S_T - D} V = \frac{0.0873}{0.0873 - 0.0127} \times 2.5 = 2.9256\ m/s$

Reynolds number: $Re_D = \frac{V_{max} D}{\nu} = \frac{2.9256 \times 0.0127}{1.516 \times 10^{-5}} = 2451$

From Table 7.2 (Cengel & Ghajar, 2011) Nusselt number:

$$Nu_D = 0.27 {Re_D}^{0.63} Pr^{0.36} \left(\frac{Pr}{Pr_s}\right)^{0.25}$$

$$T_m = \frac{T_i + T_e}{2} = \frac{93.56 + 40}{2} = 66.78°\text{C}$$

From Table A.15 (Cengel & Ghajar, 2011):

T (°C)	Pr
40	0.7255
66.78	0.718505

Table 13: Prandtl numbers for different temperatures (R-134a)

$$Nu_D = 0.27(2451)^{0.63}(0.718505)^{0.36}\left(\frac{0.718505}{0.7255}\right)^{0.25}$$
$$= 32.65$$

A correction factor needs to be used because there are less than 16 rows. There are seven rows of tubes in this application and thus the correction factor F is 0.96. Thus,

$$Nu_{D,N_{L<16}} = FNu_D$$

$$Nu_{D,N_{L<16}} = 31.346$$

$$Nu = \frac{hk}{D}$$
$$h = \frac{31.346 \times 0.02514}{0.0127}$$
$$= 62.05\ W/m^2 \cdot K$$

This value for the heat transfer coefficient is greater than that for the fin analysis, and thus, the efficiency would be increased and the tube banks analysis only improves the condenser.

6.3.4 Connection for the Condenser Tubes

The condenser is made up of a single tube which splits into five separate, equal diameter tubes. This increases the heat transfer area and allows for the use of more fins, without increasing the height of the condenser. The velocity of the refrigerant will be constant from the single tube to the five separate tubes.

The area required for the five separate tubes was found in the condenser tube section of the report:

$$A_{Large-tube} = 5 \times A_{small-tube} = 4.0293 \times 10^{-4}$$

$$A_{small-tube} = \frac{4.0293 \times 10^{-4}}{5} = 8.0586 \times 10^{-5}$$

$$d = \sqrt{\frac{4}{\pi} \times A_{small-tube}}$$
$$= 0.01013\ m$$

The diameter of each of the five smaller tubes is 10.13 mm. The available standard aluminium tube is 12.7 x 1.22 mm. The inside diameter of this tube is 10.26 mm.

To calculate the diameter of the middle tube section (where the flow will divide into two separate channels), the following calculation was done:

$$A_{Large-tube} = 2 \times A_{middle-tube} = 4.0293 \times 10^{-4}$$

$$A_{small-tube} = \frac{4.0293 \times 10^{-4}}{2} = 2.01465 \times 10^{-4}$$

$$d = \sqrt{\frac{4}{\pi} \times A_{middle-tube}}$$
$$= 0.016016\ m$$

The diameter of the middle tube section is 16.02mm. A standard aluminium tubing of size 19.06 x 1.22 mm is available. This tube has an inner diameter of 16.62 mm (EuroSteel, 2006).

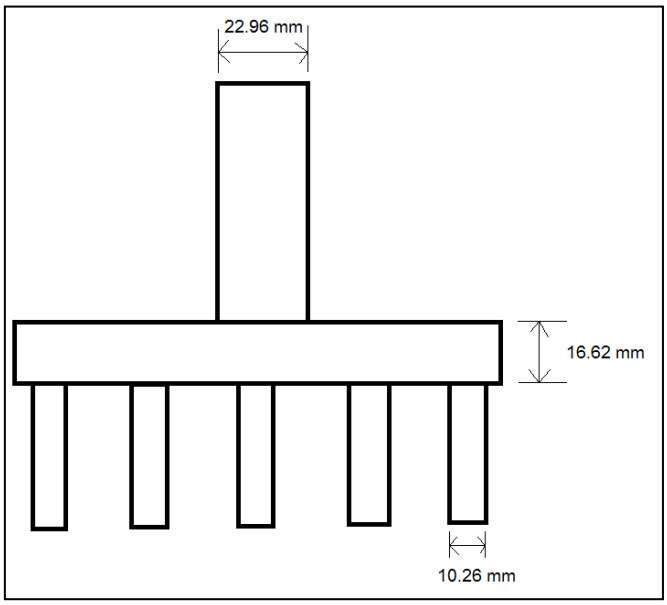

Figure 45: Schematic of condenser connection

6.4 Evaporator

The refrigerant in the evaporator absorbs heat from the surroundings at a rate of 12.15 kW. At the average operating temperature of 5°C for the refrigerant fluid, the following properties, which can be found in Table A-10 (Cengel & Ghajar, 2011), exist:

Property	Units	Liquid	Vapour
Thermal Conductivity (k)	W/m·K	0.0925	0.01259
Density (ρ)	kg/m^3	1278	17.12
Specific Heat (c_p)	J/kg·K	1358	918.7
Prandtl Number (Pr)		3.802	0.603
Dynamic Viscosity (μ)	kg/m·s	2.589 x10^{-4}	8.264 x10^{-6}

Table 14: R-134a properties at 5°C

The required heat transfer from the water is:

$$\dot{Q} = \dot{m} c_p \Delta T$$
$$= \frac{1000}{3600} \times 4\ 182 \times 10$$
$$= 11{,}616\ kW$$

Using the standard compressor, the heat transfer to the refrigerant is:

$$\dot{Q}_L = \dot{m}(h_1 - h_4)$$
$$= 0.0744(392\,340 - 352\,740)$$
$$= 12.15\ kW$$

$$\dot{Q} = \dot{m}c_p\Delta T$$
$$12.15\ kW = \dot{m} \times 4\,182 \times 10$$
$$\dot{m} = 0.2905\ kg/s$$

This mass flow rate is greater than the required flow rate of 0.2778 kg/s for the water.

Assuming a mass flux of 200 kg/m^{2}s for the water (to ensure a negligible pressure drop):

$$\dot{G} = \frac{\dot{m}}{A}$$

$$A = \frac{\dot{m}}{\dot{G}}$$
$$= \frac{0.29053}{200}$$
$$= 1.45265 \times 10^{-4}\ m$$

$$d = \sqrt{\frac{4}{\pi} \times \frac{\dot{m}}{\dot{G}}}$$
$$= 0.043m$$
$$d = 43\ mm$$

The diameter of the inner tube is 43 mm. The available standard aluminium 6061-T6 tube has an inner diameter of 41 mm and an outer diameter of 43 mm, with a wall thickness of 1 mm (Shanghai Metal Corporation, 2012).

The properties for water at the average temperature of 15°C are:

Property	Symbol	Units	Value
Density	P	Kg/m^3	999.1
Specific Heat	C_p	J/kg·K	4185
Thermal conductivity	K	W/m·K	0.589
Dynamic Viscosity	M	Kg/ms	1.138 x 10^{-3}
Prandtl Number	Pr		8.09

Table 15: Properties of water at a temperature of 15°C

The velocity of the water is:

$$V = \frac{\dot{m}}{\rho A}$$
$$= \frac{0.2905}{999.1 \times \pi \times \frac{(0.041)^2}{4}}$$
$$= 0.22023\ m/s$$

$$Re = \frac{\rho V D}{\mu}$$
$$= \frac{999.1 \times 0.22023 \times (0.041)}{1.138 \times 10^{-3}}$$
$$= 7\,927$$

This value for the Reynolds number shows that the flow occurs in the transitional region of flow through the evaporator.

Assuming a mass flux of 200 kg/m^{2}s for the refrigerant:

$$\dot{G} = \frac{\dot{m}}{A}$$
$$A = \frac{\dot{m}}{\dot{G}}$$
$$= \frac{0.080586}{200}$$
$$= 4.0293 \times 10^{-4}\ m$$

$${d_o}^2 - {d_i}^2 = \frac{4}{\pi} \times \frac{\dot{m}}{\dot{G}}$$
$$d_o = 0.0486\ m$$

The diameter of the outer tube is 48.6 mm. The available standard aluminium 6061-T6 tube has an inner diameter of 47.5 mm and an outer diameter of 50 mm, with a wall thickness of 1.25 mm (Shanghai Metal Corporation, 2012).The velocity of the refrigerant is:

$$V = \frac{\dot{m}}{\rho A}$$
$$= \frac{0.080586}{1278 \times \pi \times \frac{0.0475^2 - 0.043^2}{4}}$$
$$= 0.1971\ m/s$$

$$Re = \frac{\rho V D}{\mu}$$
$$= \frac{1278 \times 0.1971 \times (0.0475 - 0.043)}{2.589 \times 10^{-4}}$$
$$= 4\,379$$

This value for the Reynolds number shows that the flow is in the transitional region through the evaporator. Using the Log Mean Temperature Difference Method:

$$\dot{Q} = U A_s \Delta T_{lm}$$

$$\Delta T_{lm} = \frac{\Delta T_1 - \Delta T_2}{\ln\left(\frac{\Delta T_1}{\Delta T_2}\right)}$$

Constant heat flux for the water (heat flux as a result from the heat transfer to the refrigerant):

$$\dot{q}_s = \frac{\dot{Q}}{A_s}$$
$$= \frac{12150}{\pi \times 0.02222 \times L}$$
$$= \frac{174053.34}{L}$$

$$T_m = T_i + \frac{\dot{q}_s A_s}{\dot{m} c_p}$$
$$= 20 + \frac{-12150}{0.2905 \times 4185}$$
$$= 10.006\ ℃$$

For counter-flow heat exchangers:

$$\Delta T_1 = T_{h,in} - T_{c,out}$$
$$= 20 - 10$$
$$= 10\ ℃$$

$$\Delta T_2 = T_{h,out} - T_{c,in}$$
$$= 10.006 - 0$$
$$= 10.006\ ℃$$

$$\Delta T_{lm} = \frac{\Delta T_1 - \Delta T_2}{\ln\left(\frac{\Delta T_1}{\Delta T_2}\right)}$$
$$= \frac{10 - 10.006}{\ln\left(\frac{10}{10.006}\right)}$$
$$= 10.003\ ℃$$

$$\dot{Q} = U A_s \Delta T_{lm}$$

For a mass flux of 200kg/m^{2}s, and a vapour quality of 50%, the heat transfer coefficient can be found from Figure 13, on page 402 (Lips & Meyer, 2012), at an inclination angle of 0°.

$$h \cong 2150 \frac{W}{m^2 K}$$

$$\frac{1}{U} = \frac{1}{h_i} + \frac{1}{h_o}$$
$$h = \frac{Nuk}{D_h}$$
$$D_h = D_o - D_i$$

$$\dot{Q} = U A_s \Delta T_{lm}$$
$$= \frac{1}{\frac{1}{h_i} + \frac{1}{h_o}} \times \pi D_i L \Delta T_{lm}$$
$$= \frac{1}{\frac{1}{2150} + \frac{D_o - D_i}{Nuk}} \times \pi D_i L \times 10.003$$

For a constant heat flux, the Nusselt number is 4.36.

$$
\begin{aligned}
L &= \dot{Q} \times \left(\frac{1}{2150} + \frac{D_o - D_i}{Nuk}\right) \times \frac{1}{\pi D_i \Delta T_{lm}} \\
&= 12\,150 \times \left(\frac{1}{2150} + \frac{0.0475 - 0.043}{4.36 \times 0.589}\right) \times \frac{1}{\pi \times 0.043 \times 10.003} \\
&= 19.94 \\
&\approx 20\ m
\end{aligned}
$$

The length of the tube will be 21 m in order to improve efficiency. The number of turns in the evaporator coil can be determined from:

$$
\begin{aligned}
N &= \frac{L}{\pi \times D_c} \\
&= \frac{21}{\pi \times D_c}
\end{aligned}
$$

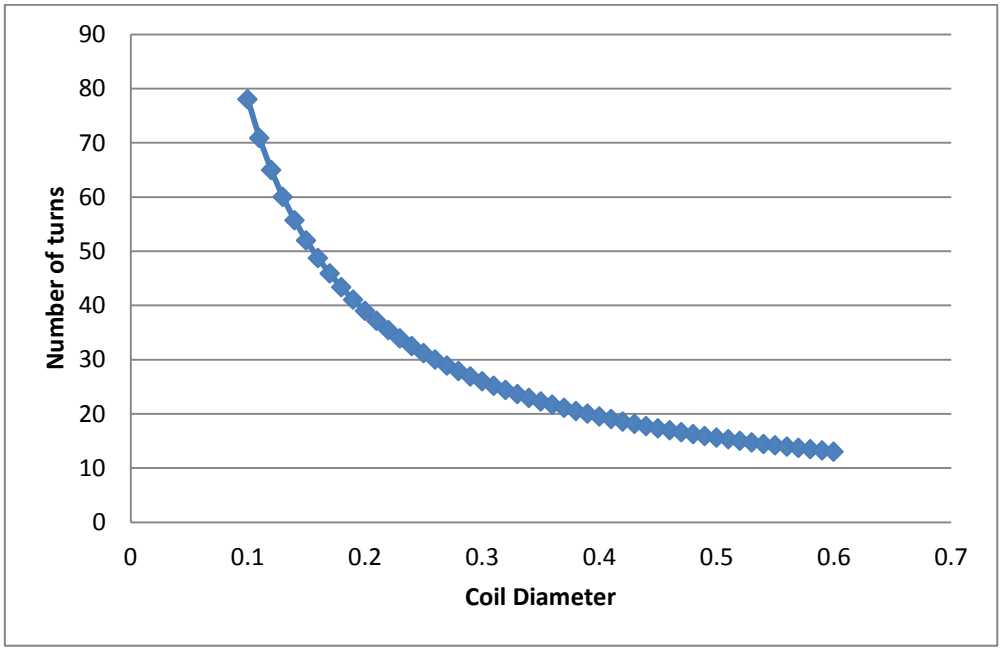

Figure 46: Evaporator number of turns versus coil diameter

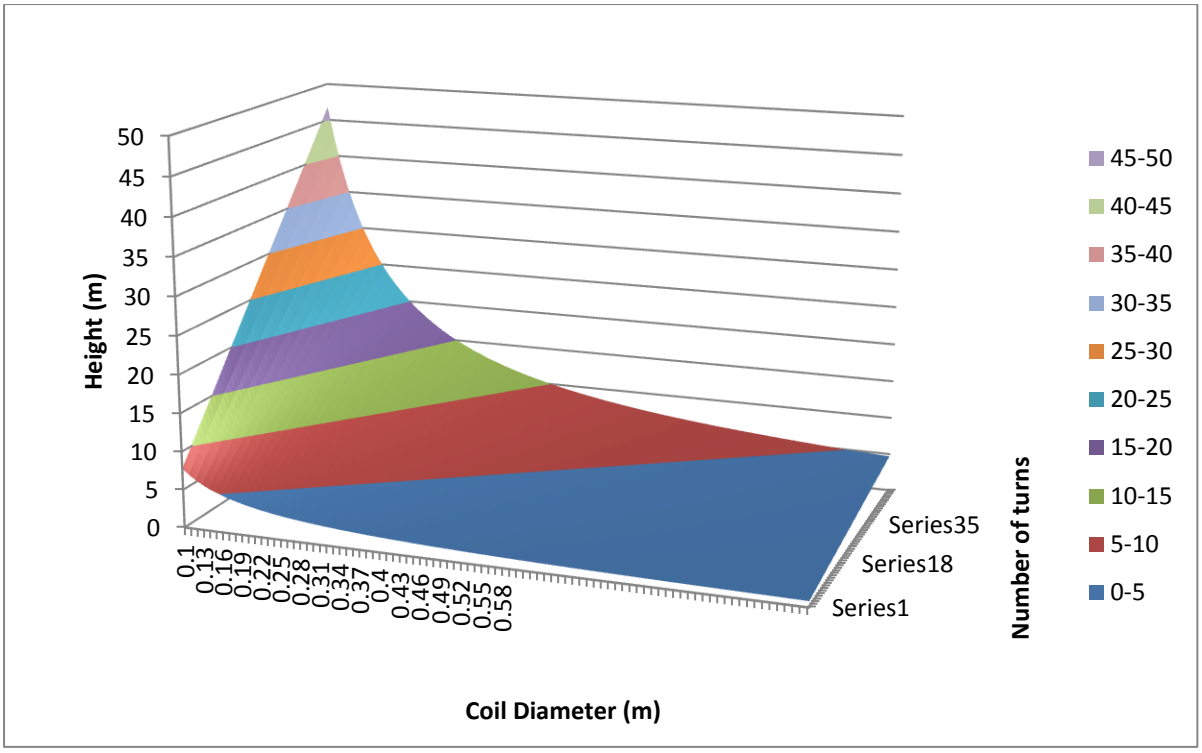

Figure 47: Height of evaporator versus coil diameter and number of turns

As the coil diameter increases, the number of turns decreases and thus the height decreases. The coil diameter is selected as 0.60 m. Using the outer diameter of the larger tube (0.05 m), the relationship between the height of the evaporator and the number of turns is shown in the graph below:

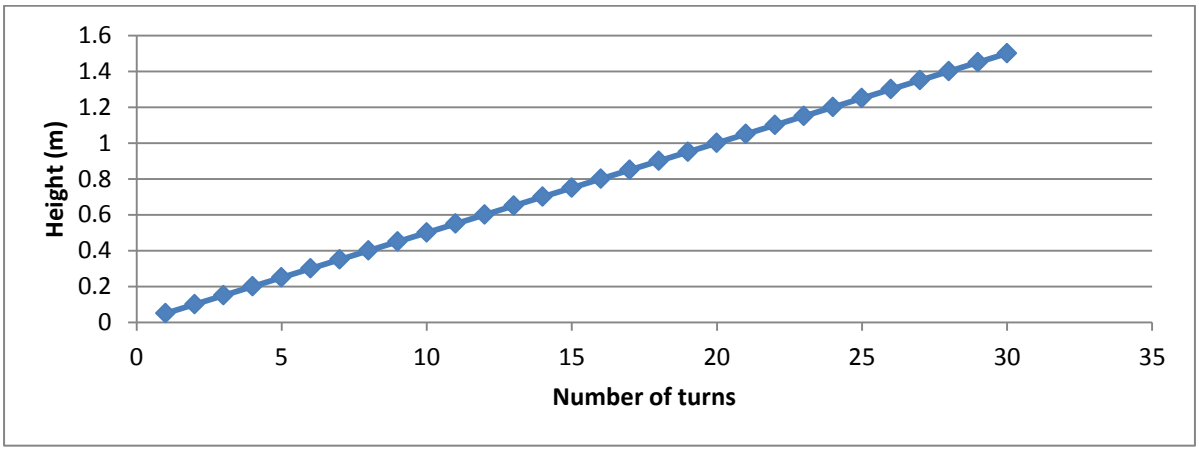

Figure 48: Height of evaporator versus number of turns

The number of turns and height of the condenser are found to be:

$$
\begin{aligned}
N &= \frac{L}{\pi \times D_c} \\
&= \frac{21}{\pi \times 0.6} \\
&= 10.61\ turns \\
&\approx 11\ turns
\end{aligned}
$$

$$H = N \times D_o$$
$$= 11 \times 0.05$$
$$= 0.55\ m$$

To calculate the heat loss from the evaporator, certain assumptions are made. The warm fluid (water) flows in the inside tube and therefore the majority of the heat loss is to the refrigerant in the outer tube. Insulation will prevent further heat loss, and by doing so, increase the efficiency of the condenser. The surface temperature of the evaporator is assumed to be 5°C (the average temperature of the cold fluid in the shell) and the ambient temperature is 25°C. Copper is a more bendable metal, however, it has a much higher density than that of aluminium. Aluminium 6061-T6, contains 4.5% copper, which will make it more bendable than pure aluminium. The properties of Aluminium 6061-T6 are given in the table below (Cengel & Ghajar, 2011). Other factors such as processing properties and mechanical properties are given in the table as well (Aluminium 6061-T6).

Property	Symbol	Units	Value
Density	ρ	Kg/m^3	2700
Specific Heat	C_p	J/kg·K	896
Thermal Conductivity	k	W/m·K	167
Brinell Hardness			95
Ultimate Tensile Strength	S_u	MPa	310
Yield Strength	S_y	MPa	276
Modulus of Elasticity	E	GPa	68.9
Poisson's Ratio	ν		0.33

Table 16: Properties of Aluminium 6061-T6

When considering insulation, the R value is important. According to the Department of Energy (2008), for insulation, "the higher the R-value, the greater the insulating effectiveness". Thickness, material type and density affect the 'R' value (Department of Energy, 2008). Because the colder refrigerant is in the outer tube, the insulation is not as imperative. Polystyrene or polyurethane could be used. These insulators have high R-values for relatively small thicknesses. Because the system is going to be in a container, weatherproofing is not necessary (Energy, 2012).

Insulation will prevent heat from the outside of the evaporator to be transferred to the refrigerant, and thus, the majority of the heat transfer to the refrigerant will be from the water which is cooling down.

It is decided that eco-insulation will be used. This is formed from recycled paper and milled to the optimum density (Eco-Insulation). A thickness of 50 mm will be used which will prevent heat loss by 76% in summer, and by 61% in winter. This insulation has an R-value of 1.31. This insulation is fire resistant, non-toxic, non-irritant and non-allergenic.

6.5 Compressor

The work of the compressor is 3.66 kW.

A MTZ80 Maneurop Reciprocating compressor will be used for this chiller. The specifications of this compressor are (Danfoss Maneurop, 1999):

- Refrigerant: R-134a
- Cooling capacity: 12.15 kW
- Power input: 3.66 kW
- Evaporating Temperature: 0°C
- Condensing Temperature: 40°C
- Frequency: 50 Hz
- Mass: 40 kg
- Size: 395 x 365 x 455 mm
- Oil: 160PZ poly-olester oil (supplied with the MTZ compressor)
- Sound power level: 68.8 dB (with acoustic hood)
- Current input: 8.45 A

6.6 Expansion Valve

Evaporating Temperature: 0°C

Cooling capacity: 12.15 kW (10454.11 kcal/hr)

Mass Flow rate: 0.080586 kg/s (290.11 kg/hr)

Using the table for R-134a with an evaporating temperature of 7.2°C, it can be found that with an inner capillary tube diameter of 2mm, for a cooling capacity of 3000 kcal/hr, and a mass flow rate of 69.74 kg/hr, the length of the capillary tube would be 1.10 m. This is for a condensing temperature of 45°C. Generally the length of the capillary tube increases by 2% for each degree increase in the condensing temperature. Since the condensing temperature is 40°C, no additional length needs to be added. For an evaporating temperature of -5°C, the length of the capillary tube is 1.09m. This is a minimal difference, and thus for a temperature of 0°C, 1.10m can be used.

Per tube:

- 3 000 kcal/hr
- 69.74 kg/hr

Therefore, when considering heat:

$$N_{CT} = \frac{10\ 447}{3\ 000} = 3.482\ tubes$$

When considering mass flow rate:

$$N_{CT} = \frac{290.11}{69.74} = 4.16\ tubes$$

Therefore five capillary tubes will be used for this application.

The available capillary tube is one with an inside diameter of 1.55 mm and an outer diameter of 3 mm. The wall thickness is 0.725 mm (Metraclark). For this diameter capillary tube, a length of 1.16 m

is required. The flow rate accommodated for is mass flow rate 32.54 kg/hr and the heat capacity is 1400 kcal/hr.

When considering heat:

$$N_{CT} = \frac{10\ 447}{1400} \\ = 7.46\ tubes$$

When considering mass flow rate:

$$N_{CT} = \frac{290.11}{32.54} \\ = 8.915\ tubes$$

Therefore ten capillary tubes will be used for this application.

Even though the length for the capillary tubes and the number of capillary tubes has increased, it is not an issue as these are very light components. It is better to use standard components, if possible, instead of manufacturing new ones.

Capillary tubes can also be found using the Danfoss Programme DanCap. For this programme, values are entered and you are informed as to what length and diameter capillary tubes are optimal. This programme accommodates heat loads up to 34 000 BTU/hr.

Converting the properties of the system

- Refrigerant: R-134a
- Heat load of system: 53982 BTU/hr / 2 =26991 BTU/hr
- Evaporating Temperature: 32°F 0°C
- Condensing Temperature: 104°F 40°C
- Return Gas Temperature: 32°F 0°C
- Flow rate: 23.69 CFM
- Length: 6 ½ in.
- Inner diameter: 0.098 in.

6.7 Suction Accumulator

A suction accumulator is selected according to the nearest higher capacity for the system. For a capacity of 12.15 kW, the nearest higher capacity is 17.2 kW at a temperature of 0°C for refrigerant R-134a (Heldon Suction Accumulators, 2009). The properties of this Heldon suction accumulator are:

- Part Number: 3100-125024A
- Connection size: ¾” ODS
- Trapping capacity: 2.17 kg
- Refrigerant: R-134a
- Temperature: 0°C
- Maximum capacity of refrigeration: 17.2 kW

- Diameter (A): 127 mm
- B 246 mm
- C 216 mm
- D 70 mm
- Mass: 2.3 kg

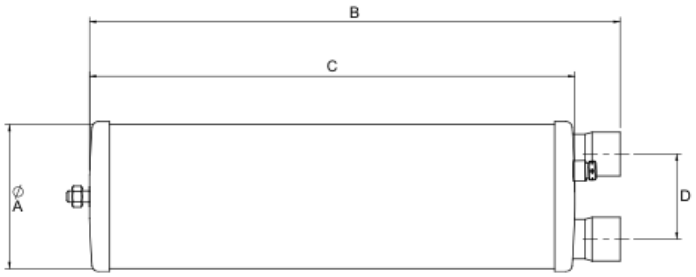

Figure 49: Heldon suction accumulator schematic (Heldon Suction Accumulators, 2009)

6.8 Fan

An axial fan will be used to pull the air through the condenser, which will increase the heat transfer rate between the hot refrigerant and the cooler air. The fan will cause forced convection rather than natural convection, which increases the heat transfer rate.

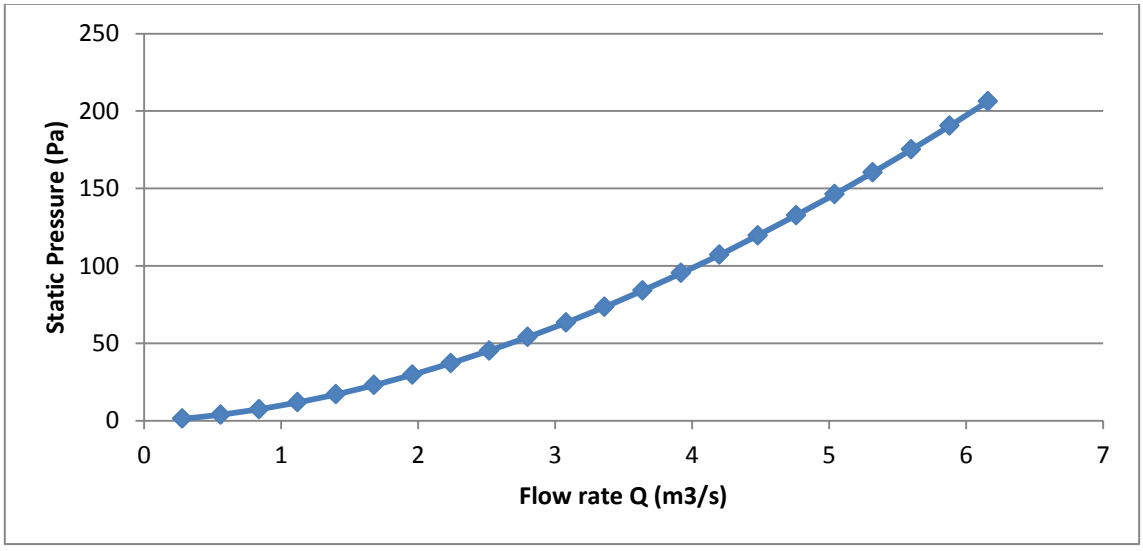

Figure 50: System curve for fan selection

Using a velocity of 3m/s, the flow rate can be calculated as:

$$\begin{aligned} q &= VA \\ &= 3 \times 0.7 \times 0.8 \\ &= 1.68\, m^3/s \end{aligned}$$

Assuming two heat sinks occur per length of tube (0.75 m), the Reynolds number was calculated for the air over a length of 0.375 m.

The pressure drop is 23 Pa over the condenser. The pressure drop and flow rate were used to specify the fan using the Howden Select-Donkin Fan Selection Programme.

The fan which will be used is the Majax-2 710.20.D4 fan. The specifications of the fan are:

- Blade angle degrees: 12
- Flow Rate: 1.69 m^3/s
- Pressure: 23.31 Pa
- Power: 0.08 kW
- Peak Power: 0.09 kW
- Speed: 720 rpm
- Efficiency: 48.66 %
- Pole Speed: 8
- Tip Speed: 26.77 m/s
- Temperature: 0.04 °C
- Mass: 54 kg
- Overall Dimensions: Overall Diameter = 817 mm Length = 400 mm
- Sound Power Level: 59.4 dBA

This fan is very heavy although it has a relatively good efficiency. Therefore a different fan has been specified.

Using a velocity of 2.5 m/s, the flow rate can be calculated as:

$$\begin{aligned} q &= VA \\ &= 2.5 \times 0.7 \times 0.8 \\ &= 1.4\ m^3/s \end{aligned}$$

The fan will therefore be a 0506/5 150 hub axial fan. The pressure drop is 17 Pa.

- Blade angle: 25°
- Hub diameter: 500 mm
- Fan power: 0.1 kW
- Sound level: 44 dBA
- Fan efficiency: 24.5%
- Speed: 960 rpm
- Impeller blades: 5 GRP blades
- Mass: 16 kg + 5*(1.1 kg) = 21.5 kg
- Size: 585 mm diameter, 400 mm casing length

6.9 Pump

The water pump is required to pump water at a flow rate of 1000 l/hr.

The Reynolds number was obtained previously as:

$$
\begin{aligned}
Re &= \frac{\rho V D}{\mu} \\
&= \frac{999.1 \times 0.22023 \times (0.041)}{1.138 \times 10^{-3}} \\
&= 7\,927
\end{aligned}
$$

A square edged inlet will be used and thus the flow will be regarded as turbulent for this Reynolds number. To determine the friction factor for turbulent flow, the Colebrook equation can be used. This equation requires iterations to determine the friction factor and is thus not preferred.

$$
\frac{1}{\sqrt{f}} = -2\log\left(\frac{\epsilon/D}{3.7} + \frac{2.51}{Re\sqrt{f}}\right)
$$

The Haaland equation is within two percent of the Colebrook equation, and is defined as:

$$
\frac{1}{\sqrt{f}} \cong -1.8\log\left(\frac{6.9}{\mathrm{Re}} + \left(\frac{\epsilon/D}{3.7}\right)^{1.11}\right)
$$

$$
f = \left(\frac{1}{-1.8\log\left(\frac{6.9}{Re} + \left(\frac{\epsilon/D}{3.7}\right)^{1.11}\right)}\right)^2
$$

Smooth tubes are being used and thus ε=0.

$$
\begin{aligned}
f &= \left(\frac{1}{-1.8\log\left(\frac{6.9}{Re}\right)}\right)^2 \\
&= \left(\frac{1}{-1.8\log\left(\frac{6.9}{7\,927}\right)}\right)^2 \\
&= 0.033
\end{aligned}
$$

The head loss due to friction can be calculated as:

$$
\begin{aligned}
h_f &= f\frac{L}{D}\frac{V^2}{2g} \\
&= 0.033 \times \frac{21}{(0.041)} \times \frac{0.22023^2}{2 \times 9.81} \\
&= 0.041783\ m
\end{aligned}
$$

The head loss due to height is:

$$
\begin{aligned}
h_z &= \Delta z \\
&= 0.65\ m
\end{aligned}
$$

This is the height of the evaporator. An additional height can be added, as the pump may be mounted lower than the evaporator. This height is assumed to be an additional 200 mm. The head loss in the connecting tube can be calculated as well.

$$Re = 7\,927$$

$$f = 0.033$$

These values are the same as the actual evaporator tube because the water flows in the inside tube and thus, there is no need for the diameter to change.

$$\begin{aligned} h_{connecting-tube} &= f\frac{L}{D}\frac{V^2}{2g} \\ &= 0.033 \times \frac{1}{(0.041)} \times \frac{0.22023^2}{2 \times 9.81} \\ &= 0.00398\, m \end{aligned}$$

Two elbows exist in the pipe network, each of 90° angles. The K-factor found in Table 6.5 (White, 2011) for these elbows is 2. The head loss due to minor losses can be calculated:

$$K = \frac{h_m}{\frac{V^2}{2g}}$$

$$\begin{aligned} h_m &= \sum K\left(\frac{V^2}{2g}\right) \\ &= 2 \times 2 \times \frac{0.22023^2}{2 \times 9.81} \\ &= 0.009888\, m \end{aligned}$$

The total head loss is calculated as:

$$\begin{aligned} h_{total} &= h_f + h_z + h_{connecting-tube} + h_m \\ &= 0.04178 + 0.85 + 0.00398 + 0.009888 \\ &= 0.9056\, m \end{aligned}$$

The volume flow rate of the water is:

$$\begin{aligned} Q &= AV \\ &= \pi \times \frac{0.041^2}{4} \times 0.22023 \\ &= 0.0002909\, m^3/s \\ &= 1.0467\, m^3/hr \end{aligned}$$

The system curve for the pump is given in Figure 51.

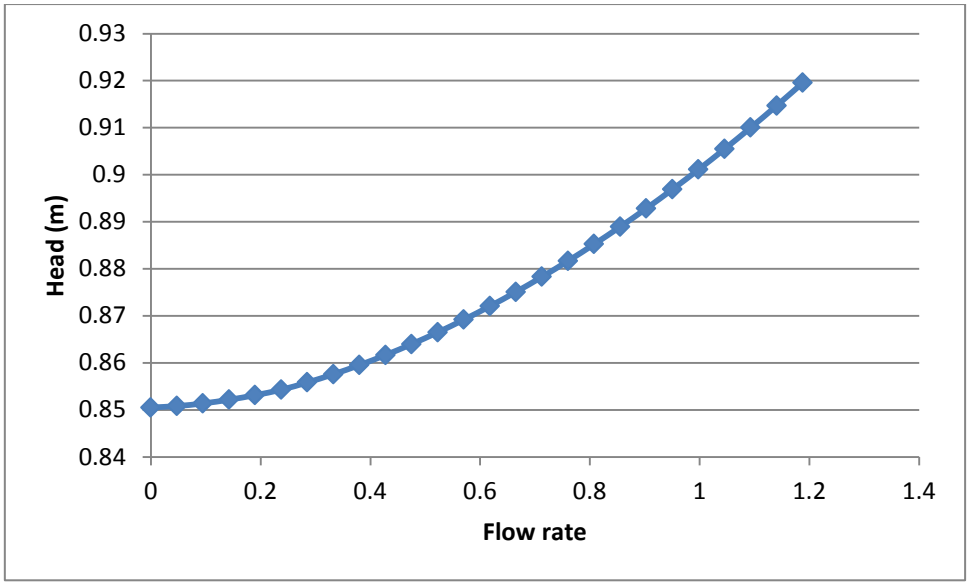

Figure 51: System curve for pump

The pump which will be used is Brubin pump CM MAG-P4. The following specifications exist for this pump.

- Maximum head: 1.76m
- Maximum flow rate: 1.9 m^3/hr
- Substance: Water (no solid particles)
- Power: 0.0124 kW
- Speed: 1450 rpm
- Mass: 5 kg
- Motor: 380 V
- Dimensions: Length 285 mm, Width 148 mm, Height 166 mm

6.10 Container and Mountings

The chiller does not have a specified location and can be used in air-conditioning, industrial and aerospace applications. Therefore the system can be placed wherever necessary. The method used for the calculations of the container and mounting of the chiller were those prescribed by Parrott (2005) (Parrott, 2005). For 300W structural steel, the following properties exist:

- F_y = 300MPa
- F_u = 450MPa
- E = 200GPa
- G = 77GPa

6.10.1 Container

The base of the container needs to withstand the force of weight of the components and the container lid.

Assuming a thickness of 4.5mm for the material, 300W Stainless Steel, the following calculations were done:

Mass of components = 100kg

Volume of the lid material:

$$0.0045 \times (1.5 \times 1 + (0.7 \times 1.5) \times 2 + (0.7 \times 1) \times 2) = 0.0045\, m^3$$

The surface area of the steel is 5 m^2

The mass of the steel is 184.5 kg (EuroSteel, 2006).

The base plate is 4.5 mm thick, with a surface area of 1.65 m x 1.15 m.

The force of the mass on the base plate is:

$$W = 316.82 \times 9.81 = 3108\, N$$

The stress on the base plate is:

$$\sigma = \frac{W}{A} = \frac{3\,108}{1.1 \times 0.0045} = 627.876\, kPa < 300MPa$$

Therefore the thickness of the material for the containing box is sufficient.

The total mass including the base plate is 394 kg.

6.10.2 Mounting brackets

Mounting brackets will be used to hold the container in place. The mass of the system is approximately 394 kg. Using 2 brackets to support the mass, each will need to support 197 kg. Hollow rectangular sections with bolts and nuts will be used as the mounting brackets. 300W steel will be used.

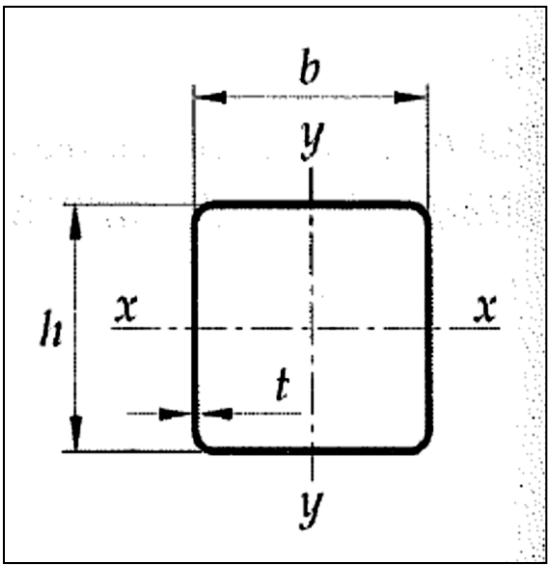

Figure 52: Rectangular hollow steel section (Parrott, 2005)

Where:

- h = 25 mm
- b = 25 mm
- t = 2.5 mm
- A = 0.204 x 10^3 mm
- r_x = 8.9mm
- Z_{plx} =1.64 x 10^3 mm

$$\frac{b}{t} = \frac{25}{2.5} = 10 < 11.55$$

Therefore this is a class 1 section.

The system is fixed on both sides and thus the effective length factor K=0.65.

$$\frac{KL}{r} = \frac{0.65 \times 0.45}{0.0089} = 32.865 < 200$$

Buckling Analysis:

$$\begin{aligned} f_e &= \frac{\pi^2 E}{\left(\frac{KL}{r}\right)^2} \\ &= \frac{\pi^2 \times 200 \times 10^9}{32.865^2} \\ &= 1\,827.52\ MPa \end{aligned}$$

$$\begin{aligned} \lambda &= \sqrt{\frac{f_y}{f_e}} \\ &= \sqrt{\frac{300}{1\,827.52}} \\ &= 0.4052 \end{aligned}$$

The steel will be cold-formed stress relieved or hot-formed, therefore n=2.24.

$$\begin{aligned} C_r &= \emptyset A f_y (1 + \lambda^{2n})^{-\frac{1}{n}} \\ &= 0.9 \times 0.204 \times 10^{-3} \times 300 \times 10^6 (1 + 0.4052^{2\times 2.24})^{-\frac{1}{2.24}} \\ &= 54.655\ kN \end{aligned}$$

This is greater than the weight of 3629.7 N and thus is sufficient when considering compression resistance.

When considering flexural compression for bending,

$$\frac{b}{t} = \frac{25}{2.5} = 10 < 24.25$$

Therefore this is a class 1 section.

The force is the mass of the system, 394 kg. The mass per mounting bracket is 197 kg and therefore the weight is 1932.57 N.

The distributed force is the weight per unit length:

$$w = \frac{1932.57}{0.4} = 4\,831.425\ N/m$$

The maximum bending moment is calculated at the location halfway along the hollow section:

$$M_u = \frac{wL^2}{2} = 386.514\ Nm$$

The resistance is:

$$\begin{aligned} M_r &= \emptyset Z_{pl} f_y \\ &= 0.9 \times 1.64 \times 10^{-3} \times 300 \times 10^6 \\ &= 442.8\ kNm > 386.514\ Nm \end{aligned}$$

Therefore the resistance is sufficient.

6.10.3 Bolts

For the containing box, in which the lid makes up 5 sides of the cube, therefore bearing bolts are used to transmit the load in bearing and shear.

Class 8.8 bolts will be used with a tensile strength of 830 MPa (f_u).

M10 x 1.5 x 20mm Hex Bolts will be used.

The bolts will be placed 25mm from either edge.

$$\begin{aligned} B_r &= \emptyset_{br} t a f_u \\ &= 0.67 \times 0.0045 \times 0.025 \times 450 \times 10^6 \\ &= 33\,918.75\ N > 1814.85\ N\ \therefore OK \end{aligned}$$

$$\begin{aligned} V_r &= 0.7(\emptyset_b m A_b 0.6 f_U) \\ &= 0.7 \times 0.8 \times 0.6 \times 1 \times \frac{\pi}{4} \times 0.01^2 \times 830 \\ &= 21\,903\ N > 490.5\ N\ \therefore OK \end{aligned}$$

The base plate will be welded to the mounting brackets which will then be attached to the floor or the wall using the bolts.

The bolts to connect the mounting bracket to the floor will be Grade 8.8 M10 x 1.5 x 20 mm bolts, which will be placed 20 mm from the edge of the bracket.

$$\begin{aligned} B_r &= \emptyset_{br} t a f_u \\ &= 0.67 \times 0.0025 \times 0.02 \times 450 \times 10^6 \\ &= 15\,075\ N > 1814.85\ N\ \therefore OK \end{aligned}$$

$$V_r = 0.7(\emptyset_b m A_b 0.6 f_U)$$
$$= 0.7 \times 0.8 \times 0.6 \times 1 \times \frac{\pi}{4} \times 0.01^2 \times 830$$
$$= 21\,903.18N > 1814.85\ N\ \therefore OK$$

The mass of the hollow square section is 1.817 kg/m; therefore the mass for the mountings is 1.6353kg.

6.11 Total Mass

6.11.1 Standard components

Component	Supplier	Mass/unit	Units	Total Mass
Compressor	Danfoss Maneurop	40 kg	1	40 kg
Suction Accumulator	Heldon	2.3 kg	1	2.3 kg
Fan	AMS	21.5 kg	1	21.5 kg
Water Pump	Brubin Pumps	5 kg	1	5 kg
Capillary Tubes	Metraclark	0.0464 kg/tube	10	0.464 kg
Total Mass				**69.264 kg**

6.11.2 Materials

Material	Supplier	Mass/Unit	Units	Total Mass
Evaporator				
Inner tube (43mm x 1mm)	Shanghai Metal Corporation	0.4 kg/m	1 (21 m)	8.4 kg
Outer Tube (50mm x 1.25mm)	Shanghai Metal Corporation	0.55 kg/m	1 (21 m)	11.55 kg
Condenser				
Tube (12.7mm x 1.22mm)	EuroSteel	0.119 kg/m	5 (6.1m)	3.63 kg
Fins (2500mm x 1250mm x 0.5mm)	EuroSteel	4.36 kg/sheet	11	44.1 kg
Container				
Plates (6000x2000x4.5mm)	EuroSteel	36.9 kg/m^2	6.76	249.44 kg
Mountings	MacSteel	1.817 kg/m	0.9	1.6353 kg
Bolts, Nuts, Washers (M10)	Builder's Express	0.03625 / set	8	0.29 kg
Total Mass (including container)				**364.045 kg**

6.12 Coefficient of Performance

The coefficient of performance is an important factor in the design of this chiller. A COP of 2.2 is required. The system operates at the ambient conditions of Pretoria. The table below shows the average minimum and maximum temperatures for each month of the year (South African Holiday: Tshwane's (Pretoria's) Climate). This is important to consider because the coefficient of performance

is affected by the ambient conditions. These ambient conditions affect the performance of each individual component, and therefore, the entire system.

Month	Average Temperature (°C)	
	Minimum	Maximum
January	16	27
February	16	27
March	14	26
April	10	24
May	6	21
June	3	19
July	3	19
August	6	22
September	9	25
October	13	27
November	14	27
December	15	28

Table 17: Average maximum and minimum temperatures for Pretoria

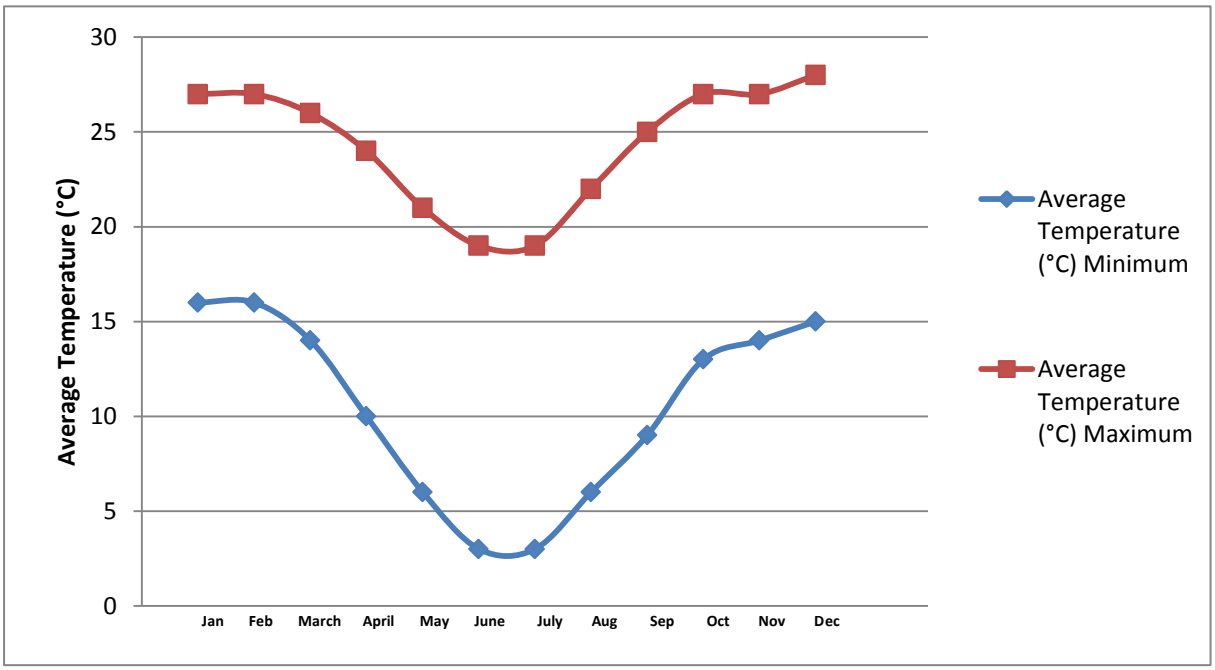

Figure 53: Graph of average temperatures for Pretoria

Taking the ambient temperature as 30°C (maximum):

<u>Point 1 (superheated vapour):</u>

- $T_1 = 10°C$
- $P_1 = P_{sat} = 294$ kPa
- $h_1 = 407.3098$ kJ/kg
- $s_1 = 1.758846$ kJ/kg

<u>Point 2 (superheated vapour):</u>

$$h_2 = \frac{\dot{W}_c}{\dot{m}} + h_1$$
$$= \frac{3.94}{0.06891} + 407.3098$$
$$= 464.48\ kJ/kg$$

- T_2 = 85.508 °C (interpolation)
- $P_2 = P_3$ = 1318.1 kPa
- h_2 = 464.48 kJ/kg
- s_2 = 1.828 kJ/kg (interpolation)

Point 3 (saturated liquid):

- T_3 = 50°C (20°C higher than the ambient)
- P_3 = 1318.1 kPa
- $h_3 = h_f$ = 271.83 kJ/kg
- $s_3 = s_f$ = 1.2381 kJ/kg

Point 4 (saturated):

- T_4 = 0°C
- $P_4 = P_{sat}$ = 294 kPa
- $h_4 = h_3$ = 256.54 kJ/kg
- x = 0.285037
- s_4 = 1.207 kJ/kg

$$\dot{m} = \frac{\dot{Q}_L}{(h_1 - h_4)} = \frac{10.390}{407.3098 - 256.54} = 0.06891\ kg/s$$

$$\dot{Q}_L = \dot{m}(h_1 - h_4) = 10.39\ kW$$

$$\dot{Q}_H = \dot{m}(h_2 - h_3) = 0.06891(464.48 - 256.54) = 14.33\ kW$$

$$COP = \frac{\dot{Q}_L}{W_{compressor} + W_{Pump} + W_{fan}} = \frac{10.39}{3.94 + 0.0124 + 0.1} = 2.564$$

Taking the ambient temperature as 3°C (minimum):

Point 1 (superheated vapour):

- T_1 = 10°C
- $P_1 = P_{sat}$ = 294 kPa
- h_1 = 407.3098 kJ/kg
- s_1 =1.758846 kJ/kg

Point 2 (superheated vapour):

$$h_2 = \frac{\dot{W}_c}{\dot{m}} + h_1 = \frac{3.66}{0.080586} + 407.3098 = 452.73\ kJ/kg$$

- T_2 = 65.27 °C (interpolation)
- $P_2 = P_3$ = 628.9 kPa
- h_2 = 452.73 kJ/kg
- s_2 = 1.8452 kJ/kg (interpolation)

Point 3 (saturated liquid):

- T_3 = 23°C (20°C higher than the ambient)
- P_3 = 628.9 kPa
- $h_3 = h_f$ = 231.75 kJ/kg
- $s_3 = s_f$ = 1.11058 kJ/kg

Point 4 (saturated):

- T_4 = 0°C
- $P_4 = P_{sat}$ = 294 kPa
- $h_4 = h_3$ = 256.54 kJ/kg
- x = 0.285037
- s_4 = 1.207 kJ/kg

$$\dot{Q}_L = \dot{m}(h_1 - h_4)$$
$$= 12.15\ kW$$

$$\dot{m} = \frac{\dot{Q}_L}{(h_1 - h_4)}$$
$$= \frac{12.15}{407.3098 - 256.54}$$
$$= 0.080586\ kg/s$$

$$\dot{Q}_H = \dot{m}(h_2 - h_3)$$
$$= 0.080586(452.73 - 231.75)$$
$$= 17.8\ kW$$

$$COP = \frac{\dot{Q}_L}{W_{compressor} + W_{Pump} + W_{fan}}$$
$$= \frac{12.15}{3.66 + 0.0124 + 0.1}$$
$$= 3.22$$

The COP is not affected by the heat loss through the condenser. The work of the compressor and heat capacity of the system are affected by the evaporating and condensing temperatures. For this system, the lowest condensing temperature is 40°C, and thus the COP will have a maximum of that for the detail design. The lowest value for the COP is found when the condenser operates at the maximum temperature of 50°C. This value is 2.564 and thus the COP of this chiller will be greater than 2.2, which is required.

6.13 Conclusion

The detail design of the chiller is complete. Essentially, further improvements can be done to this design; however, due to the time constraint and the limited resources (such as supplier information) this is the best design possible. This is a first order design which can be improved, possibly with the use of software and during a longer time period.

The coefficient of performance has been calculated as greater than 2.2 for all cases and thus any increase in the efficiency of one or more of the components will only further increase the COP. The components are not as efficient as they should be because it is a first order design and therefore only available information could be used to complete the calculations.

Chapter 7

Manufacturing Analysis

7.1 Introduction

This design project requires the manufacturing analysis of two components, for which drawings were prepared. The two essential components in the chiller are the evaporator and the condenser. For this reason, the manufacturing analysis will focus on these two components. Other detail designs include the condenser distributor and the base plate. The container is a relatively simple manufacturing process and need not be discussed. Also, it can be a standard component if need be.

Tube cutting is necessary for both components. Cutting oil must first be applied to the surface of the tube which will be cut. As cutting of the aluminium tubes becomes difficult, add more oil as needed. This will also preserve the tool. To cut through the tube, the jaws of the tube cutter are tightened around the tube. The cutter is then turned to make a ridge line. To make the cut, the jaws are tightened. The edges must then be filed to remove burns or sharp edges (Innis, 2013).

7.2 Condenser

The condenser consists of aluminium tubes with aluminium fins attached along the lengths of the tubes. Several bends are made in the tubes as to minimise space limitations (minimise length) and by using several tubes, the height can also be minimised. The tubes will be 10.26 mm inner diameter, 12.7 mm outer diameter tubes; with a length of 6.1 m. Aluminium tubes are available with a length of 5 m. Therefore two tubes will be needed per tube; however the additional length will need to be cut off using a tubing cutter. This can be used because aluminium is a soft metal. The ends should be filed straight and smooth. The two tubes will be joined using the soldering method.

It is easier to manufacture curved sections of pipe and join these curved sections to straight sections, instead of making several bends in one tube. Therefore these joints will be accomplished using flame brazing. Flame brazing can be used on aluminium tubes which will be used for R-134a applications, and protection is not required. A filler alloy, with a lower melting point than the tubes is used (possibly containing the flux as well). The brazing ring is placed on the tube and heated up with a torch. When the filler material has melted, the flame can be removed, and the sections are joined.

The curved sections of the tube have a 100 mm diameter curve on the outer edge of the tube. The inner diameter of the curved section is 74.6 mm. These curved sections will be manufactured using a hydraulic bender. These sections will then be attached to the 650 mm straight aluminium sections.

The fins will be attached to the straight sections, before they are joined to the curved sections. The fins are made from aluminium sheets and need to be cut to precision as they will fit over the aluminium tubes. Therefore laser cutting will be used. Another possibility is to use plasma cutting, however, many believe this is less precise than laser cutting. The laser cutting will be used to cut the diameter of the tube out of the sheet and the fin size. The fins will be attached to the aluminium

tubes by the press-fitting method. This can be done either by thermal expansion of the fins or thermal contraction of the tube. It will be easy to heat the fins and to manoeuvre them because they are made from very thin aluminium sheets. Solder can be used to reinforce the fins if necessary.

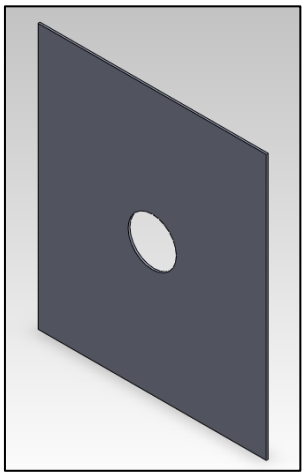

Figure 54: Condenser fin

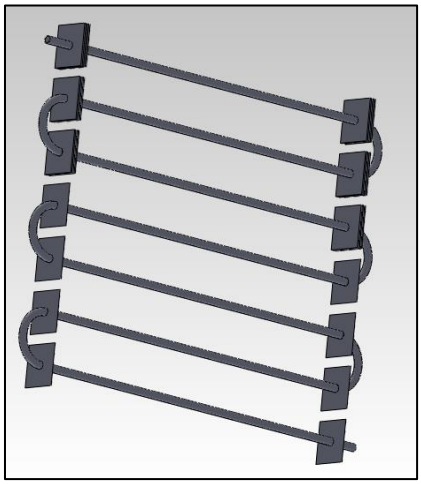

Figure 55: Condenser

7.3 Evaporator

The evaporator consists of two aluminium tubes which are helically coiled. The inner tube is a 43 mm outer diameter, 41 mm inner diameter tube manufactured from aluminium 6061-T6. The outer tube is a 50 mm outer diameter, 47.5 mm inner diameter aluminium 6061-T6 tube. These tubes need to be bent to a hydraulic diameter of 60 cm, and the total tube length for each tube is 21 m.

Since tubes are not available at a length of 21 m, tube sections will be soldered together to form the necessary length. The ends will then be cut using laser tube cutting. Water will flow through the inner tube of the evaporator, and the refrigerant will flow through the outer tube. The outer tube will have a face soldered to it and a tube will be connected to the top of the tube, through which the refrigerant will enter the evaporator. The hole through which the refrigerant enters the evaporator will be done using laser cutting. At the base of the evaporator, another tube will be connected to

allow for the refrigerant to exit the evaporator. This joint will also be accomplished using soldering. The water tube will continue with the same diameters, from the pump to the evaporator.

The soldering will be done using a propane torch, aluminium flux, aluminium solder and a metal file. The tube edges need to be filed and cleaned prior to soldering them. The aluminium solder will be dipped into the aluminium flux prior to use with the torch (Smith, 2013).

The connection for the condenser consists of seven tubes, of three different diameters. The holes where the tubes will join will be done using the laser cutting method and the tubes will be inserted into these holes with the press fitting method. Further soldering will improve the joint.

Figure 56: Evaporator

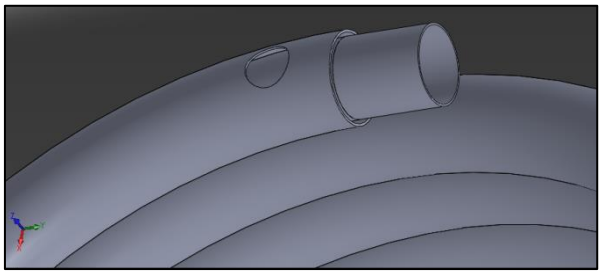

Figure 57: Refrigerant and water inlets of the evaporator

7.4 Conclusion

The two components discussed above are very important for the functionality of the chiller and must be manufactured to precision. Standard components will be manufactured by the suppliers and should perform as expected. The casing of the entire system does not affect the working of the system and is thus not as important. The casing is for aesthetic reasons and to protect the chiller from any debris or dirt which can affect the performance of the components.

The laser cutting allows for precision and the flame brazing is a good method of joining tubes, however it is expensive. For the connector of the condenser tubes, laser cutting will also be used because precise holes have to be cut into the tube walls. The tubes can then be connected to each

other using the soldering method, which will be easier to use for the connection of tubes and plates which are not concentric or of equal diameters.

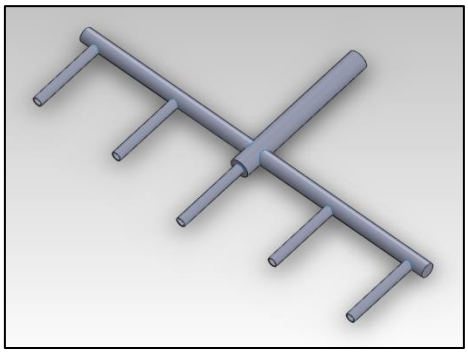

Figure 58: Condenser distributor

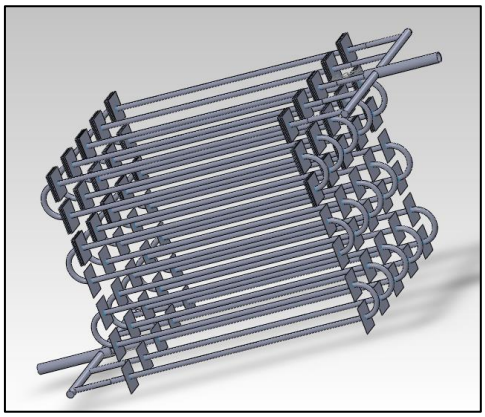

Figure 59: Condenser Assembly

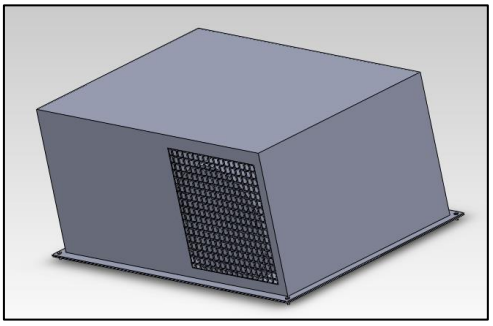

Figure 60: Container

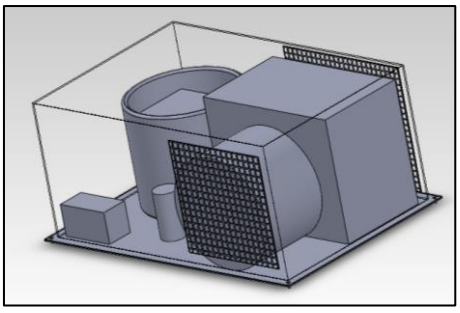

Figure 61: Assembly of the chiller

Chapter 8

Maintenance Analysis

Maintenance analysis is very important in the designing of a chiller. It is important to know what factors to look for and which parts may necessarily need to be replaced. An important factor in maintenance analysis is the consideration of how easily parts can be dismantled and how easily they can be replaced.

8.1 Standard Components

For this design, many standard components were used, such as the water pump, compressor, suction accumulator, expansion valve and fan. These components would need to be ordered in if failure of one occurs. This can take time, but this is quicker than manufacturing brand new components. The need for replacement of any of these standard components will require a shutdown of the chiller.

8.2 Heat Exchangers

The heat exchangers are designed to accommodate for system specifications. New tubes or fins will need to be manufactured if one fails. Five extra fins exist on each tube section of the condenser (35 tube sections in total). This means that if one fin was to fail, it would not cause the system to be less efficient than required. The tubes are not internally finned, and thus are relatively easy to replace. They are also standard tubes, and can be ordered in. Replacement of any of these tubes or fins will require a shutdown of the chiller.

The chiller can be placed indoors or outdoors and since it is being used to chill water, cooler conditions are not a problem. This will just enhance the system and improve the efficiency. Pretoria is not subject to extremely cold conditions and thus the chance of ice being existent on the chiller is minute. If temperatures do happen to fall very low, an insulating material can be placed over the containing box. The evaporator could be subject to ice build-up due to the cold temperature of the refrigerant. It is important to continually check for this, however, due to the ambient conditions, this should not be a problem.

8.3 General

In general, the chiller needs to be monitored. Sounds and vibrations of the chiller itself, or the individual components, can be an indication of a need to check the functionality. Some parts may be failing, or the lubrication may need to be changed, or more added. Early detection of this allows for more time to locate spare parts and will prevent the damage of all of the components.

Any possible corrosion also needs to be monitored. This could affect the efficient working of the system. The condenser and evaporator are manufactured from aluminium, which has already corroded, and thus water will not cause the heat exchangers to corrode further. The standard

components could be affected by corrosion, if it exists. Periodical inspections will prevent corrosion from becoming a problem.

The refrigerant may need to be replaced at intervals, and thus should also be inspected periodically. Any dirt in the refrigerant will cause the system to not operate correctly and could be detrimental to one or more of the components. Inspection of the containing box and the interior should be done often to prevent dirt from entering a component or the general surrounding space in the containing box.

8.4 Inspections

Inspection of the various standard components and manufactured components will allow for the determination of which elements need to be fixed or replaced. Inspections can be done during down-time. The inspection procedure is discussed in the qualification requirements chapter of this report.

Inspection of fouling will also ensure that the heat exchangers (and specifically the condenser) are not subject to additional, unnecessary resistance to heat transfer. Any build up of dust or leaves can cause resistance on the fins. These areas can be cleaned and therefore the heat transfer and efficiency can be maintained.

8.5 Conclusions

Maintenance needs to be done on this system in order to ensure a long operational life, energy efficiency and reliability of the components. The design capacity must be sustained in order to continuously reach the design requirements. Inspections will ensure that the system is maintained when necessary. It is important to be aware of the sounds of the chiller because this can be an indication as to whether it is functioning correctly or not. The chiller can be maintained relatively easily as it is not a very complicated system. Many standard components are used and these can be replaced.

Chapter 9

Reliability Analysis

9.1 Introduction

Reliability can be defined as "the extent to which an experiment, test, or measuring procedure yields the same results on repeated trials" (Merriam-Webster , 2013), or it can be viewed as how credible and dependable a system is. For a system such as a chiller, the reliability is a very important factor. Due to the change in temperatures, the results will not continually be exactly the same; however, they will always be better than the system requirements. A slight change in value will not cause this system to be unreliable.

9.2 System Reliability

This chiller system relies on the correct working of each component. If a single component fails, the entire system will fail, and thus will need to be shut down for maintenance. The number of components in this system is 18. 14 of these are standard components (10 capillary tubes, compressor, suction accumulator, fan and water pump). The not standard components are the condenser, evaporator and the two condenser distributors. The reliability can then be calculated. Reliability can be defined as:

$$R_{Total} = R_1 R_2 R_3 \dots R_{n-1} R_n$$

Where 'n' is the number of components in the system. New, standard components are assumed to have a reliability of 100%. The designed components are assumed to have a reliability of 95%. The reliability of the system is therefore:

$$\begin{aligned} R_{Total} &= (100\%)^{14} \times (95\%)^4 \\ &= 81.45\ \% \end{aligned}$$

Time factors allow for the calculation of the reliability of a system over its life span and this can be calculated by:

$$F = \int_0^t f(t)dt$$

$$Reliability = 1 - F$$

The failure curve of the components is not known, prior to start up and thus this calculation cannot be performed until the chiller is in commission.

Since there are five additional fins on each of the condenser tubes, if one were to fail, it would not have a significant impact on the efficiency of the condenser. There are a total of 175 additional fins on the condenser, and therefore this system will only begin to fail when 176 fins are not allowing the required heat transfer, this could possibly be due to fouling. To prevent the fouling, a grating is used

for the fan and the condenser to prevent leaves from entering the system. The system could be cleaned in order to remove the dust or leaves and the fins would perform as required.

The tube length of the evaporator is longer than necessary, and therefore any slight changes to the working fluids, and their temperatures, will not cause a detrimental change to the entire system outcome.

The use of capillary tubes in this chiller is important for the reliability factor. Capillary tubes are usually free from breakdowns (Cubigel Compressors), and thus are more reliable than expansion valves. This will increase the total reliability of the system.

9.3 Conclusion

This system is a quite reliable one and thus the reliability is not a concern. Over time, the reliability the system will decrease due to the probability of the components failing. The components can be subject to fatigue failure, but this will take a long period. The initial running of the system should be one hundred percent reliable, as all components are new.

The standard components have been tested and work as they are specified, therefore failure should not occur during the beginning period of the chiller. The manufactured components have slightly increased geometries and thus failure will only occur in these components if a complete through-hole exists. Continuous inspection of the components will allow for the determination of any possible fatigue failure and therefore the entire system should not fail.

Chapter 10

Qualification Requirements

10.1 Introduction

This chapter of the report focuses on the qualification requirements. The qualification requirements involve the inspection procedure of the chiller. Inspections can prevent the event of the system failing because it allows for the detection of any possible holes, corrosion or any defects on the system components.

10.2 Supplier Requirements - Operational and Performance Parameters

- Inlet temperature of chilled water: 20°C
- Outlet temperature of chilled water: 10°C
- Temperature drop in chilled water: 10°C
- Chilled water flow rate: 1000 l/hr
- Noise levels: < 85 dB
- Chiller efficiency: COP > 2.2
- Electrical power consumption of chiller and water pump:

All of the requirements above have been met sufficiently, and thus the design could be used. If the manufactured components and standard components are manufactured correctly and within the tolerances given, the chiller should operate as expected and as required. Additional requirements involve the following:

- Electrical components and systems are manufactured and controlled by licensed electricians.
- A warranty of one year for the parts and a warranty of five years for the compressor.
- Possible warning lights and alarms if the system is not operating correctly.
- Rubber must be used between mountings to reduce vibrations and therefore noise levels.
- Maintenance and inspections must be completed by licensed persons.

The above points are not included in the mechanical design of the chiller, and thus when sold by a company, a total package should be created, using the chiller design, electrical design and the people who are allowed to service the chiller.

10.3 Pre-start-up Inspection and Testing

Before the chiller starts running, measurements of the wall thicknesses and diameters of the manufactured components should be checked to ensure they are as specified. This will allow for the chiller to perform as expected. The components should be installed correctly and the standard components should be new and clean.

Testing of the system can then be done to ensure that the system runs as expected and to ensure that the standard components work as they should. This testing will determine whether the components operate in accordance with codes, standards and design documents. Functional performance testing can then be done.

10.4 General Inspections

Water quality can affect the performance of the chiller. The pump can only be used with clean water containing no suspended particles. This means that the water quality must be monitored to ensure that the pump will not fail or become damaged. Continuous inspection of the water source and pump must be done.

Maintenance and inspections ensure that the correct heat transfer, energy efficiency and operating life of the chiller are sustained. This means that testing of the components with respect to their wall thicknesses, corrosion and their functionality must be monitored.

Inspections of the components can be done using visual testing, ultrasonic inspections or radiographic inspection. These inspection methods will determine whether the wall thicknesses in the connection tubes or the tubes of the evaporator or condenser have decreased. This should not be common, because R-134, air and water are non-corrosive, however, any suspended particles could cause corrosion and therefore a wall thickness loss.

10.5 Evacuation

Evacuation of the chiller system is a very important qualification requirement. Essentially the system is emptied of everything by the use of an evacuation pump. If a leak occurs, air could enter the system, which causes the water vapour in the air to mix with the refrigerant. When this mixture enters the expansion valve, the water will freeze and block the expansion valve. The freezing of the water is as a result of the large pressure drop.

This chiller will be filled with nitrogen at typical pressures which are two or three times that of the working pressure of the system. This specified pressure should be less than 17 Torr (approximately 2 266 Pa). The addition of nitrogen will allow for the detection of water, as the water will begin to bubble. This will aid in the determination of whether a leak occurs, and where the leak occurs. Leaks are detrimental to any refrigeration system and thus detection is important. The use of nitrogen to flush out the chiller, will remove any moisture that exists.

10.6 Refrigeration Charge

Refrigeration charge is difficult to determine in the first few cycles of the chiller operating. A valve is added to the system, after the evaporator and before the suction accumulator. The refrigerant enters the system through this valve, as this is the loading point. After a few cycles, it will be possible to determine the mass of the refrigerant exists in the system, under the required conditions. The type of refrigerant is already known, R-134a.

10.7 Product Specifications

- Product name: Chiller
- Rated water temperature: 10°C
- Refrigerant: R-134a
- Cooling capacity: 12.15 kW
- Noise level: 68.8 dBA
- Power input: 3.773 kW
- Weight: 137 kg
- Quality approved: Yes
- Manufacture date: 21 June 2013
- Warranty: 1 year for components, 5 years for compressor
- Model: ChillerSRA1

10.8 Conclusion

Inspections and maintenance of the components in this chiller system will sustain the service life, reliability and ensure that the design capacity is sustained. Performance of the chiller is important and thus through inspections, early detection of failure can prevent the entire chiller being destroyed (if dirt were to enter the system).

Inspections require the complete shut-down of the system and should be done when the chiller is not required, possibly after hours, or when the aeroplane is undergoing other maintenance. This reduces additional down-time and ensures that the system is running sufficiently.

Chapter 11

Cost Analysis

11.1 Introduction

Cost analysis is an important part of design, because essentially cost needs to be kept to a minimum in order to compete with other designs, and also to be affordable. This chiller design, however, is a first-order design and costs have not been minimised completely. The tables show the costs of the standard components, material costs and labour costs, as well as the total costs for this chiller system.

11.2 Cost of Standard Components

Component	Supplier	Cost/Unit	Units	Total Cost
Compressor	Danfoss Maneurop Reco	R11 742	1	R11 742.00
Capillary Tubes	(Alibaba)	20 US$/kg	0.464 kg	R85.60
Fan	AMS	R3 500	1	R3 500.00
Suction Accumulator	Heldon	R350	1	R350.00
Water Pump	Brubin Pumps	R5 600	1	R5 600.00
Total Cost				**R21 277.60**

11.3 Cost of Materials

Material	Supplier	Cost/Unit	Units	Total Cost
Evaporator				
Inner tube (43mm x 1mm)	Shanghai Metal Corporation	1.35 US$/m	21 m	R261.50
Outer Tube (50mm x 1.25mm)	Shanghai Metal Corporation	1.8 US$/m	21 m	R348.66
Condenser				
Tube	EuroSteel	R10.5/m	5 x 6.1 m	R320.25
Fins	Laser Junction	See Labour costs	11 sheets	-
Material Cost Excluding Container				**R930.41**
Container				
Plates (6000x2000x4.5mm)	Beijing Startion Iron & Steel Co., Ltd	US$ 600/ton	249.44 kg	R1 521.71
Mounting Brackets		≈R300	2	R600.00
Bolts , Nuts, Washers(M10)	Builder's Express	R4.24	4 each	R16.96
Bolts, Nuts, Washers (M20)	Builder's Express	R7.94	4 each	R31.76
Total Cost				**R3 100.84**

11.4 Labour Costs

Type of Work	Supplier	Cost/Unit	Units	Total Cost
Laser Cutting	Laser Junction (Material and cutting)			
Fins		R3.02	7 525	R22 725.50
Bending		R400/hr	5 hours	R2 000.00
Assembly		R400/hr	2 hours	R800.00
Total Costs				**R25 525.50**

11.5 Rent and Utility Costs

Office space can be rented in Menlyn, Pretoria for a cost of R120.00 per month (Free Property Ads, 2012). Since the assembly of this chiller will take less than one month, the rent will cost a total of R120.00. Utilities for an 85m^2 apartment cost approximately R1 350.00 per month (Numbeo, 2013). This includes, water heating, electricity and garbage. The total rent and utilities cost is therefore R1 470 per month.

11.6 Total Costs

Cost Type	Cost
Standard Components	R21 277.60
Material	R3 100.84
Labour	R25 525.50
Rent and Utilities	R1 470.00
Total	**R51 373.94**

The exchange rate is at R9.2238 to the United States Dollar (ABSA, 2013).

Since this design is an Original Equipment Manufacturer (OEM), the total cost of the materials and standard components can be cut by approximately 50%. Therefore the total cost of the materials, will thus be R12 913.17 (including the fins)

Cost Type	Cost
Standard Components	R10 638.80
Material	R12 913.17
Labour	R2 800.00
Rent and Utilities	R1 470.00
Total	**R27 821.97**

11.7 Conclusion

Although not all of the prices were obtainable exactly, this is a good approximation as to the total cost of the chiller. The chiller could also be made more than once and therefore bulk buying can further drop the costs of manufacturing this chiller. As an OEM, the price of the material costs can decrease by 50%, which causes a large drop in the chiller manufacturing cost.

Chapter 12

Social, Legal, Health, Safety and Environmental Impacts

12.1 Introduction

In this age, social, legal, health, safety and environmental impacts are very important considerations for a design. Due to the increasing demand of safe and clean environments, it is important to ensure that all laws are abided by, and that fatal accidents cannot occur.

12.2 Social Impacts

A social impact which could cause irritation to humans is the smell of the working fluid, refrigerant R-134a. This refrigerant, however, has no 'strange stench' (R134a Refrigerant).

12.3 Legal Impacts

South Africa is one of the many countries which have agreed to the Kyoto Protocol. This means that only certain refrigerants can be used in air-conditioning systems, refrigeration, heat pumps and other systems. The use of refrigerant R-134a ensures that legality is satisfied for this chiller.

Codes and standards are required to be satisfied when designing a mechanical part or system. Since codes do not exist for the design of a chiller, this is not an issue. The containing box abides by the SANS code for structural steel design (Parrott, 2005). For these reasons, the chiller is legal in terms of the physical system.

Sound power levels need to be kept to a minimum when designing a system. This can be difficult but since the chiller is not in close proximity to people, it is not a legal issue. The sound level should be kept below 85 dB. This is discussed in the safety impact section of this chapter.

12.4 Health Impacts

Rust is harmful to both the environment and people. Rust occurs as a result of the chemical reaction between iron water and oxygen. This rust then flakes off and can cause lung irritation when inhaled (Judge, 2013). For this reason the metal which is used for the components should not be susceptible to too much rust or be in an environment where rust can occur. Aluminium is a metal which will not rust as it spontaneously forms a thin oxide layer on the surface when exposed to air, and thus it was the choice for the components. Also, the components are in a container and thus water should not exist on the exterior of the components.

No hearing loss should occur due to the operation of this chiller. This is discussed in the safety impacts section of this chapter. The insulation which is used for the evaporator is non-allergenic and non-irritant and thus does not pose any health problems.

12.5 Safety Impacts

When considering the safety of this chiller, it is important to determine whether the working fluid is safe. The refrigerant R-134a is safe to use because it is not flammable, non-explosive, non-irritant and non-corrosive (R134a Refrigerant).

An important safety factor nowadays is that of sound power levels. The threshold of pain is at 120 dB and the accepted level is 85 dB for an eight hour period. Since none of these components individually exceed this level, the system is safe. For a further reduction in sound power level, rubber could be placed between the components and their mountings, to reduce the vibrations and therefore decrease the sound level. The chiller is self-operational and does not require a person to be in close proximity; therefore ear muffs are not required. If inspection is required, the chiller can be shut-down, or the inspector could wear ear-muffs. During maintenance, the chiller would be shut-down and therefore the sound level will not be an issue.

The components are safe as they are contained in a box. Therefore persons cannot harm themselves on any of the components, and they will not be able to break any of the components. The chiller will also be on the outside of a building, or above the ceiling and therefore it will be difficult to get to, unless inspection or maintenance is required.

The insulation which will be used on the evaporator is environmentally friendly as it is manufactured from recycled paper. It is fire resistant, non-irritant, non-toxic and non-allergenic (Eco-Insulation).

12.6 Environmental Impacts

A major impact on the environment, when considering a chiller, is whether or not the refrigerant is environmentally safe or not. R-134a is environmentally friendly as it does not contain chlorine, which forms chloro-fluro-carbons which cause ozone depletion. Since the Kyoto Protocol was enforced in February 2005, in order to reduce emissions and therefore combat climate change, the refrigerants which are used have changed to those with lower ODP's (Ozone Depletion Potential) and lower GWP's (Global Warming Potential). Refrigerant R-134a has an ODP of 0 and a GWP of 0.29 (R134a Refrigerant), in comparison to the former refrigerant which was used, R-12, which has an ODP of 1 and a GWP of 2400 (Refrigerants - Environmental Properties). The refrigerants environmental effect is determined by the ODP and the GWP. The ODP gives the "relative amount of degradation it can cause to the ozone layer" and the GWP shows how much a mass of gas contributes to the greenhouse effect (heat trapping capability) (Refrigerants - Environmental Properties).

Aluminium has been used for all of the manufactured parts, as it is corrosion resistant. Therefore aluminium does not further negatively impact the environment. Also, the refrigerant R-134a is non-corrosive. The lack of rust dust ensures that the environment is not damaged. Through inspection, it can be found if any leakages of the R-134a are occurring. Any leakage results in an addition to global warming, and so this must be prevented. Wall thickness inspections and connection inspections can be done to prevent this.

Energy and efficiency of a system is important due to the energy demands. This system is efficient having a coefficient of performance of greater than 2.2. The individual components are relatively efficient and therefore energy is saved. The fan and the fins are not as efficient as they should be,

however, since this is a first order design, and it is difficult to obtain all of the prices and fan curves, it is difficult to specify a better fan.

The insulation used for the evaporator is made from recycled paper and thus is helping the environment, by not using another product which is non-renewable. Also, paper is wasted and thus with this insulation, the wastage amount is less.

12.7 Conclusion

In conclusion, this chiller satisfies all legal requirements and through continuous inspection, the system will abide by these requirements. If wall thicknesses decrease and corrosion occur, maintenance can be done. This system is environmentally friendly as it is energy efficient, makes use of an environmentally friendly refrigerant and is free from rust and corrosion. Safety aspects involving the sound level and general safety are both accounted for. For these reasons, the chiller design is safe and environmentally friendly, and thus can be used.

Chapter 13

Drawings

The drawings which have been included show an assembly drawing with the overall dimensions, and where each component should be placed. The assembly drawing also shows the total number of parts in the system. The detail drawings are manufacturing drawings. These can be given to the manufacturer, and he or she will know exactly what is required, including the material, tolerances and dimensions of the part.

Detail designs have been done of the evaporator, condenser, condenser distributor and base plate. The condenser distributor will be used at the inlet and the outlet of the condenser. The drawings are given in appendix D of this report.

The CAD drawings were done on SolidWorks. The CAD drawings done were the assembly drawing and the detail designs of the evaporator and the condenser. Hand drawings were done of the base plate and condenser distributor.

UNIVERSITEIT VAN PRETORIA
UNIVERSITY OF PRETORIA
A3
1:2
DISTRIBUTOR
AYRES
10261720
M
TOLERANCES
DATUM
24-06-2013

UNIVERSITEIT VAN PRETORIA
UNIVERSITY OF PRETORIA
A3
1:2
24-05-2013
M15
SR
I
I understand what plagiarism is and am aware of the University's policy in this regard.
I declare that this drawing is my own original work.
I have not used another student's past work to hand in as my own.
I have not allowed, and will not allow, anyone to copy my work.
with the intention of passing it off as his or her own work.

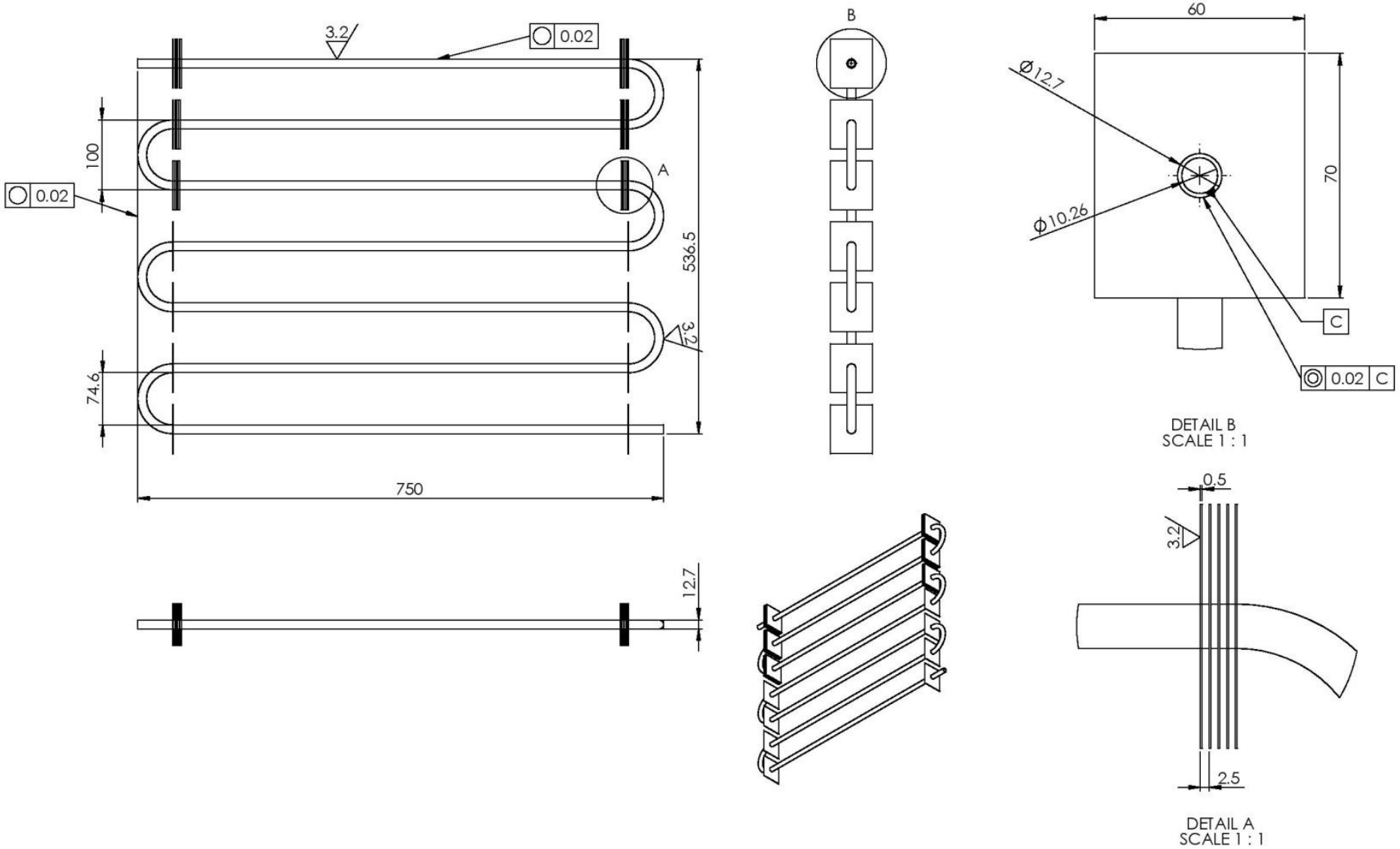

1. I understand what plagiarism is and am aware of the University's policy in this regard.
2. I declare that this drawing is my own original work.
3. I have not used another student's past work and hand-in as my own.
4. I have not allowed, and will not allow, anyone to copy my work with the intention of passing it off as his or her own work.

TOLERANCES FROM - TO	+/-
0 - 6	0.1
6 - 30	0.2
30 - 100	0.3
100 - 300	0.5
300 - 1000	0.8
1000 - 3000	1.2
3000 - PLUS	2.0
ANGLES	1°

ITEM NR / ITEM NO	AANTAL / QUANTITY	BESKRYWING / DESCRIPTION: CONDENSER TUBE		MATERIAAL / MATERIAL: ALUMINIUM 6061-T6	ONDERDEEL NR / PART NR: 3
VAN / SURNAME: AYRES		VOORLETTERS / INITIALS: SR		TITEL / TITLE: MISS	
STUDENTE NO / STUDENTE NR: 10261720		RIGTING / DISCIPLINE: M		TEKENING NR / DRAWING NR	
PROJEKSIE / PROJECTION	UNIVERSITEIT VAN PRETORIA / UNIVERSITY OF PRETORIA	A3	SKAAL / SCALE: 1:10	DATUM / DATE: 2013-05-24	

C:\Users\Derek Ayers\Documents\Condenser Drawing NEW2 Last saved 17 May 2013 12:16:24 PM

VOLTOOI TITELBLOK IN SWART INK/COMPLETE TITLEBLOCK IN BLACK INK

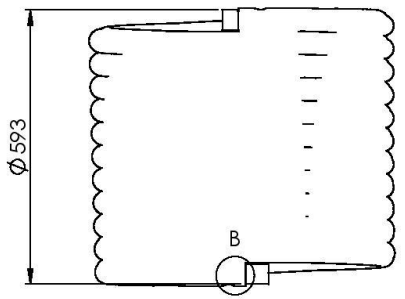

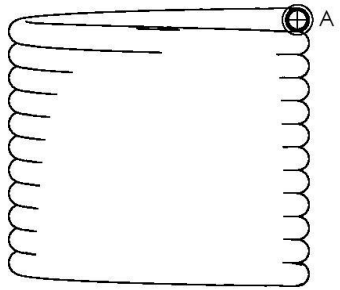

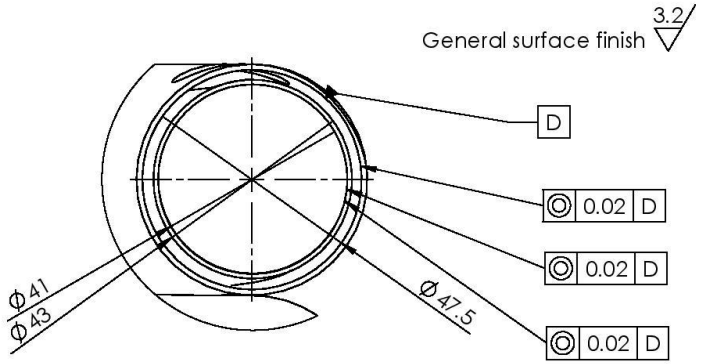

DETAIL A
SCALE 1 : 1

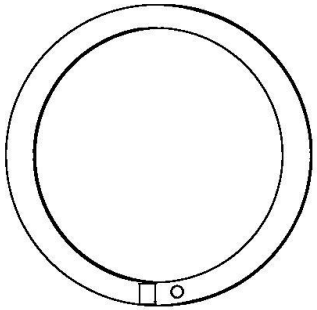

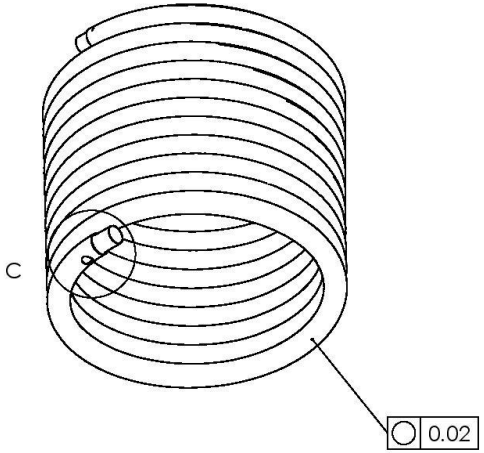

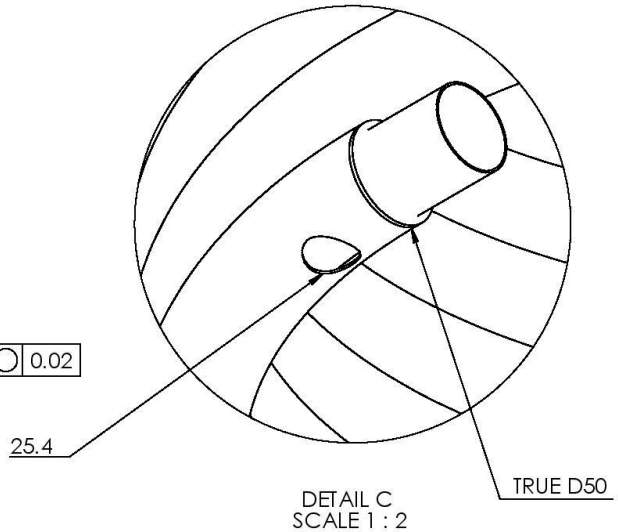

DETAIL C
SCALE 1 : 2

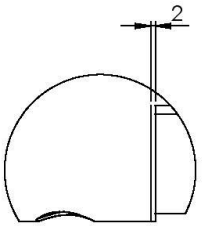

DETAIL B
SCALE 1 : 2

1. I understand what plagiarism is and am aware of the University's policy in this regard.
2. I declare that this drawing is my own original work.
3. I have not used another student's past work to hand-in as my own.
4. I have not allowed, and will not allow, anyone to copy my work with the intention of passing it off as his or her own work.

TOLERANCES	
FROM - TO	+/-
0 - 6	0.1
6 - 30	0.2
30 - 100	0.3
100 - 300	0.5
300 - 1000	0.8
1000 - 3000	1.2
3000 - PLUS	2.0
ANGLES	1°

ITEM NR / ITEM NO	AANTAL / QUANTITY	BESKRYWING / DESCRIPTION	EVAPORATOR	MATERIAAL / MATERIAL ALUMINIUM 6061-T6	ONDERDEEL NR / PART NR 8
VAN / SURNAME	AYRES	VOORLETTERS / INITIALS	SR	TITEL / TITLE	MISS
STUDENTE NO / STUDENTE NR	10261720	RIGTING / DISCIPLINE	M	TEKENING NR / DRAWING NR	
PROJEKSIE / PROJECTION		UNIVERSITEIT VAN PRETORIA / UNIVERSITY OF PRETORIA	A3	SKAAL / SCALE 1:10	DATUM / DATE 2013-05-24

C:\Users\Derek Ayers\Documents\Evaporator drawing Last saved 17 May 2013 01:25:24 PM

VOLTOOI TITELBLOK IN SWART INK/COMPLETE TITLEBLOCK IN BLACK INK

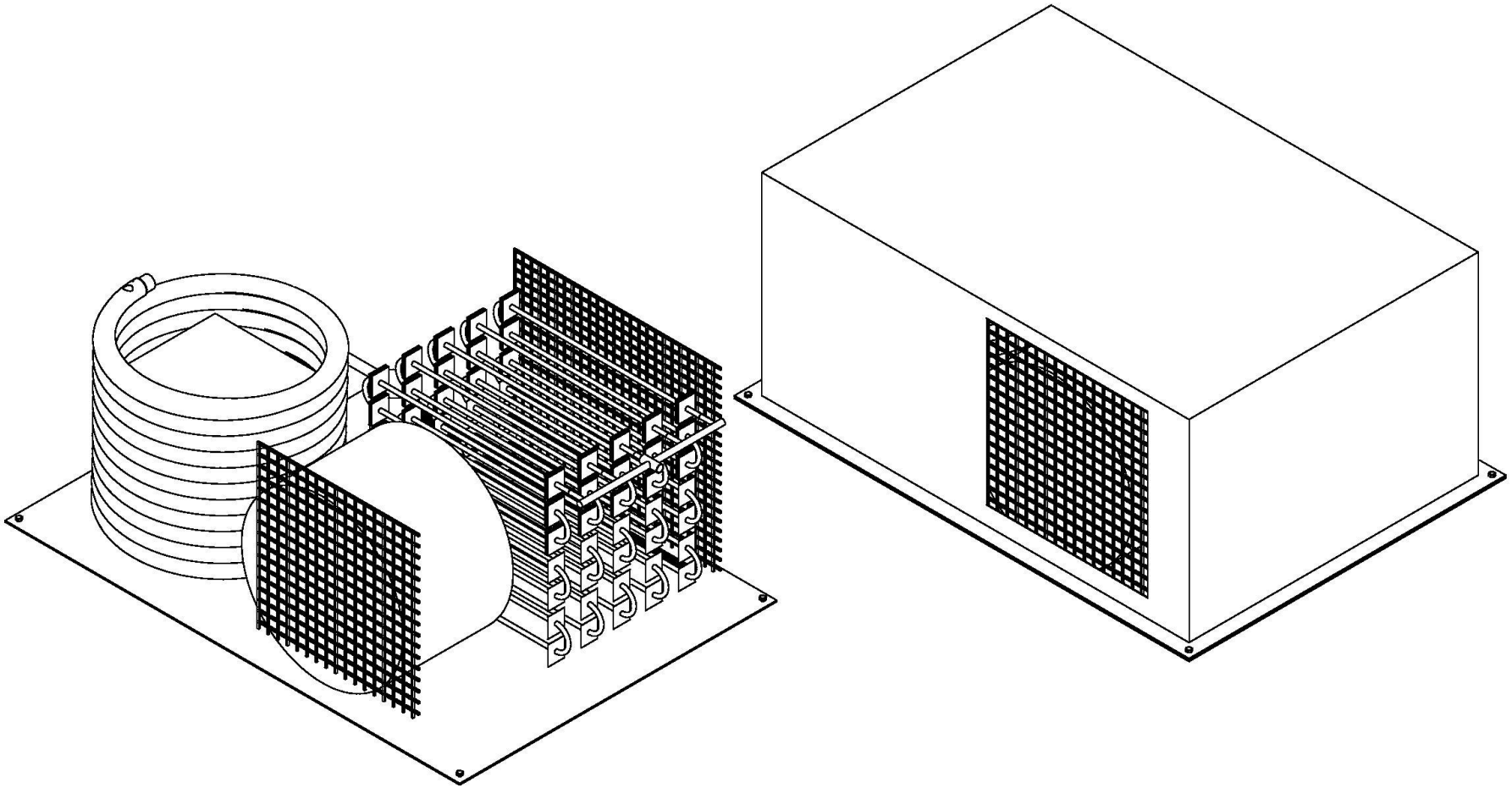

1. I understand what plagiarism is and am aware of the University's policy in this regard.
2. I declare that this drawing is my own original work.
3. I have not used another student's past work to hand-in as my own.
4. I have not allowed, and will not allow, anyone to copy my work with the intention of passing it off as his or her own work.

TOLERANCES FROM - TO	+/-
0 - 6	0.1
6 - 30	0.2
30 - 100	0.3
100 - 300	0.5
300 - 1000	0.8
1000 - 3000	1.2
3000 - PLUS	2.0
ANGLES	1°

ITEM NR / ITEM NO	AANTAL / QUANTITY	BESKRYWING / DESCRIPTION: CHILLER		MATERIAAL / MATERIAL	ONDERDEEL NR / PART NR
VAN / SURNAME: AYRES			VOORLETTERS / INITIALS: SR	TITEL / TITLE: MISS	
STUDENTE NO / STUDENTE NR: 10261720			RIGTING / DISCIPLINE: M	TEKENING NR / DRAWING NR	
PROJEKSIE / PROJECTION		UNIVERSITEIT VAN PRETORIA / UNIVERSITY OF PRETORIA	A3	SKAAL / SCALE: 1:20	DATUM / DATE: 2013-05-24

C:\Users\Derek Ayers\Documents\Assembly Last saved 17 May 2013 11:35:00 AM

VOLTOOI TITELBLOK IN SWART INK/COMPLETE TITLEBLOCK IN BLACK INK

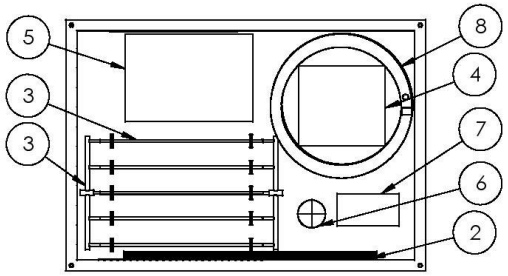

SECTION A-A

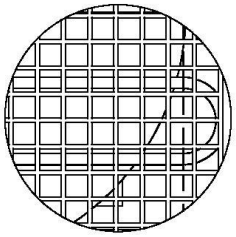

DETAIL C
SCALE 1 : 5

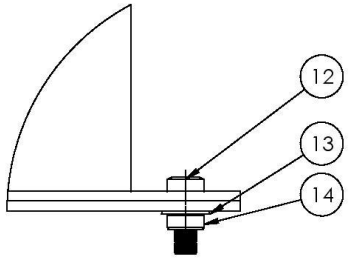

DETAIL B
SCALE 1 : 2

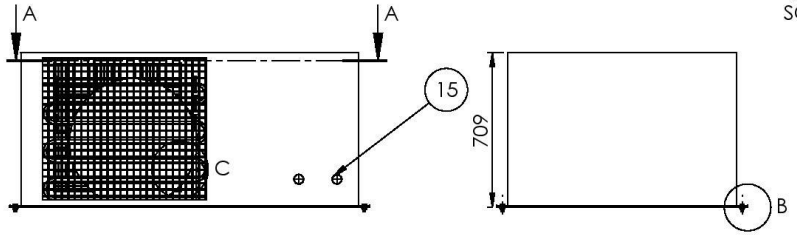

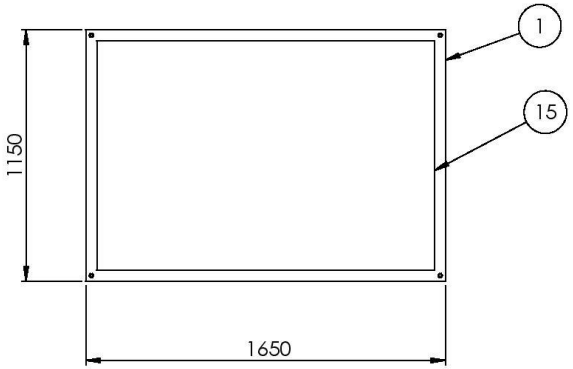

ITEM NO.	PART NUMBER	DESCRIPTION	QTY.
1	Base Plate	300W Structural steel	1
2	Capillary Tube		10
3	Condenser Assembly	Aluminium 6061-T6	1
4	Compressor		1
5	fan		1
6	Suction Accumulator		1
7	Pump		1
8	Evaporator	Aluminium 6061-T6	1
15	Lid	300W Structural Steel	1
10	Fan Grating	300W Structural steel	1
11	Condenser Grating	300W Structural steel	1
12	M10 x 35 bolt	Class 8.8	4
13	M10 washer	Class 8.8	4
14	Nut (M10)	Class 8.8	4
15	Water Inlet and Outlet		2

1. I understand what plagiarism is and am aware of the University's policy in this regard.
2. I declare that this drawing is my own original work.
3. I have not used another student's past work to hand-in as my own.
4. I have not allowed and will not allow anyone to copy my work with the intention of passing it off as his or her own work.

TOLERANCES FROM - TO	+/-
0 - 6	0.1
6 - 30	0.2
30 - 100	0.3
100 - 300	0.5
300 - 1000	0.8
1000 - 3000	1.2
3000 - PLUS	2.0
ANGLES	1°

ITEM NR / ITEM NO	AANTAL / QUANTITY	BESKRYWING / DESCRIPTION: CHILLER	MATERIAAL / MATERIAL	ONDERDEEL NR / PART NR
VAN / SURNAME: AYRES	VOORLETTERS / INITIALS: SR	TITEL / TITLE: MISS	
STUDENTE NO / STUDENTE NR: 10261720	RIGTING / DISCIPLINE: M	TEKENING NR / DRAWING NR	
PROJEKSIE / PROJECTION	UNIVERSITEIT VAN PRETORIA / UNIVERSITY OF PRETORIA	A3	SKAAL / SCALE 1:20	DATUM / DATE 2013-05-24

C:\Users\Derek Ayers\Documents\Assembly Last saved 17 May 2013 11:35:00 AM

VOLTOOI TITELBLOK IN SWART INK/COMPLETE TITLEBLOCK IN BLACK INK

Chapter 14

Conclusions and Recommendations

14.1 Conclusions

The project requires the design of a chiller, which is both efficient and environmentally friendly. The requirement of the chiller is to deliver chilled water at 10°C from a temperature of 20°C, at a flow rate of 1000 l/hr. The system is to have a coefficient of performance (COP) of greater than 2.2.

The literature study allowed for knowledge gained in terms of the workings of the system components, and the types of materials and heat exchangers that should be used. A functional analysis has been done to specify which each main component is required to do in the system. Concept generation and concept selection were then done to determine the best heat exchangers for the system as well as the best layout and containing boxes.

Detail design was then done for the standard components, and for the components which needed to be manufactured. This was a lengthy process which involved the use of spreadsheets to determine the most efficient and the most compact way to design the heat exchangers. The specification of the standard components was difficult because suppliers were not always willing to give the required or necessary information.

Analyses were done to determine the manufacturing method, maintenance method and inspection requirements. Also, the reliability and cost were determined and discussed. The final analysis was that of the environmental, social, legal, health and safety impacts of this chiller design. This is a very important chapter as the considerations and requirements nowadays are closely monitored and there are many stipulations about what is acceptable.

The standard components specified are quite efficient. Although the fan is not very efficient, the size is also an important factor which resulted in the choice of the less efficient fan. Capillary tubes, even though less efficient than expansion valves, have a much lower mass and price.

In conclusion, this chiller is energy efficient and environmentally friendly. These are two very important aspects when designing a mechanical system. The COP requirement for this project has been exceeded, for all temperatures in Pretoria. In fact, the efficiency is much greater especially in winter. This is due to condensing temperature still being at 40°C, but the air temperature being less than 20°C.

14.2 Recommendations

It is recommended that further investigation into this chiller be done, including the use of software and a longer time period. It is very difficult to get prices from suppliers and thus the best component could not always be selected. More information from suppliers would allow for a better cost

estimate to be accomplished. Also, if more than one person was to work on this project, better ideas could be thought up.

A crank case heater should be added to the compressor to prevent the failure of the compressor. These are particularly suited to low ambient climates or to areas where large temperature fluctuations occur. Essentially a crank case heater will prevent backflow of the refrigerant and therefore the prevention of a mixture of oil and refrigerant. This is due to the fact that during any down-time, the compressor will cool down. If the oil and refrigerant mix, there is less oil available to lubricate the compressor, which can lead to failure. Crank case heaters are corrosion resistant and water resistant (Specific Systems, 2013).

14.3 Limitations

This was a first order design and therefore it is quite basic. Further calculations and knowledge could improve the design. A lot of knowledge about thermodynamics and heat and mass transfer was gained throughout this project. Further knowledge could ensure that the chiller is designed correctly and that every analysis is done.

Assumptions were made with regards to the components in the chiller and these assumptions affect the workings of it. Steady state components were used.

Suppliers were not also reachable and therefore the best price and product was not attainable. Therefore the cost and mass could have further been reduced, but due to time restraints, and being a student, the best information was not always attainable.

References

ABSA. (2013, May 10).

Advantage Engineering. (2013). *R-410a Refrigerant.* Retrieved March 6, 2013, from Advantage: http://www.advantageengineering.com/fyi/246/advantageFYI246.php

A-Gas. (n.d.). *Refrigerant R123.* Retrieved March 5, 2013, from A-Gas: http://www.agas.com/upload/product/071113042031_11882.pdf

Aluminium 6061-T6. (n.d.). Retrieved March 25, 2013, from ASM Aerospace Specification Metals Inc.: asm.matweb.com/search/SpecificMaterial.asp?bassnum=MA6061t6

Bachus, L., & Custodio, A. (2003). *Centrifugal Pumps.* The Bachus Company Inc.

Black & White. (2012). Retrieved March 4, 2013, from Black & White - Gallery: http://megaru.homelinux.org

Borgnakke, C., & Sonntag, R. E. (2009). *Fundamentals of Thermodynamics Seventh Edition.* Asia: John Wiley & Sons, Inc.

Cengel, Y. A., & Ghajar, A. J. (2011). *Heat and Mass Transfer Fundamentals and Applications, Fourth Edition.* Singapore: McGraw-Hill .

Changzhou Xinxin Refrigerating Equipment Co., Ltd. (2013). *Fin Evaporator*. Retrieved March 4, 2013, from Made-in-China.com: http://czxinxin.en.made-in-china.com/product/hepxHXBMAlkc/China-Fin-Evaporator.html

Compact Heat Exchanger. (2013). Retrieved March 4, 2013, from JaxspotPictures: http://jaxspotpictures.com/Posters/compact-heat-exchanger.html

Convective Heat Transfer. (n.d.). Retrieved April 8, 2013, from The Engineering ToolBox: www.engineeringtoolbox.com/convective-heat-transfer-d_430.html

Cubigel Compressors. (n.d.). *Recommendation for the determination of capillary tube size*. Retrieved April 18, 2013, from Cubigel Compressors: www.cubigel.com/java/X@cgi=cubigel.infotecnica.InfomacionTecnicaArticulo2.pattern&seccion=informaciontecnica.html

Danfoss Maneurop. (1999, May). Selection & Application Guidelines. *Maneurop Reciprocating Compressors* . Trevoux, France: Danfoss Commercial Compressors.

Davey Compressor Company. (n.d.). *Different Type Air Compressors*. Retrieved March 6, 2013, from Davey Compressor Company: http://www.daveycompressor.com/differenttype.html

Department of Energy, A. S. (2008, January 15). *Insulation Fact Sheet*. Retrieved March 25, 2013, from Department of Energy: www.ornl.gov/sci/roofs+walls/insulation/ins_02.html

Dholariya, K. (2012, April 9). *The principle of centrifugal pump...* Retrieved March 5, 2013, from Be the best: http://kaushalp18.blogspot.com/2012/04/principle-of-centrifugal-pump.html

Dometic Group. (n.d.). *Fin evaporator VD-03*. Retrieved March 4, 2013, from Dometic: http://www.dometic.com/enie/International/Site/Marine/Marine-Leisure/Cooling-Units/Products/?productdataid=98777

Eco-Insulation. (n.d.). *Insulation Product.* Retrieved May 2, 2013, from Eco-Insulation: www.eco-insulation.co.za/aritcles/view/product

Emerson Climate Technologies. (2013). *Expansion Valves*. Retrieved April 16, 2013, from Emerson Climate Technologies: www.emersonclimate.com/en-US/products/valves/Pages/expansion_valves.aspx

Energy, U. D. (2012, May 30). *Types of Insulation*. Retrieved March 25, 2013, from Energy.Gov: energy.gov/energysaver/articles/types-insulation

EuroSteel. (2006). *Aluminium.* Retrieved April 29, 2013, from EuroSteel: www.eurosteel.co.za/images/documents/24%Round%20Tubing.pdf

EuroSteel. (2006). *Stainless Steel.*

Free Property Ads. (2012). *Pretoria East*. Retrieved May 20, 2012, from Free Property Ads: www.freepropertyads.co.za/commercial-property/to-let/africa/south-africa/gauteng/pretoria/pretoria-east/

Fritz, C. (2013). *Functions of a Refrigeration Compressor*. Retrieved March 18, 2013, from eHow: www.ehow.com/about_5079979_functions-refrigeration-compressor.html

Ghodbane, M. (. (1999). An Investigation of R152a and Hydrocarbon Refrigerants in Mobile Air Conditioning. *SAE Technical Paper Series* , 1-16.

Grauso, S., Mastrullo, R., Mauro, A., Thome, J., & Vanoli, G. (2013). Flow pattern map, heat transfer and pressure drops during evaporation of R-1234ze(E) and R134a in a horizontal, circular smooth tube: Experiments and assessment of predictive methods. *International Journal of Refrigeration 36* , 478-491.

Heldon Suction Accumulators. (2009, February). Retrieved April 2, 2013, from www.heldon.com.au/getattachment/6168cc2c-4872-4f0d-a6d3-ff5dec8fd022/Accumulators.aspx

Innis, S. (2013). *How to Cut Aluminium Pipe*. Retrieved April 22, 2013, from eHow: www.ehow.com/how_5007309_cut-aluminium-pipe.html

Judge, M. (2013). *Is Rust Dust Harmful?* Retrieved April 30, 2013, from eHow: www.ehow.com/info_8606864_rust-dust-harmful.html

Khemani, H. (2010, February 16). *Thermostatic Expansion Valve or TEV*. Retrieved March 18, 2013, from Bright Hub Engineering: www.brighthubengineering.com/hvan/58501-thermostatic-expansion-valve-or-tev/#imgn_2

Lips, S., & Meyer, J. P. (2012). Experimental study of convective condensation in an inclined smooth tube. Part I: Inclination effect on flow pattern and heat transfer coefficient. *International Journal of Heat and Mass Transfer* , 395-404.

Lips, S., & Meyer, J. P. (2012). Experimental study on convective condensation in an inclined smooth tube. Part II: Inclination effect on pressure drops and void fractions. *International Journal of Heat and Mass Transfer* , 405-412.

Mago, P., Chamra, L., & Somayaji, C. (2007). Performance analysis of different working fluids for use in organic Rankine cycles. *Proc. IMechE Vol. 221 Part A: J. Power and Energy* , 255-264.

McNaught, J. M. (2011, February 2). *Condensers*. Retrieved February 26, 2013, from Thermopedia: www.thermopedia.com/content/654/

Merriam-Webster . (2013). *Reliability.* Retrieved April 25, 2013, from Merriam-Webster: www.merriam-webster.com/dictionary/reliability

National Refrigerants. (2008). R-152a. *Material Safety Data Sheet* , 1-6.

National Refrigerants. (2008). R-401a. *Material Safety Data Sheet* , 1-7.

Numbeo. (2013). *Cost of Living in Pretoria, South Africa*. Retrieved May 20, 2013, from Numbeo: www.numbeo.com/cost-of-living/city_result.jsp?country=South+Africa&city=Pretoria

Ozone Secretariat. (2011). *The Montreal Protocol on Substances that Deplete the Ozone Layer.* Retrieved March 6, 2013, from United Nations Environment Programme: http://ozone.unep.org/new_site/en/montreal_protocol.php

Parrott, G. (2005). *Structural Steel Design to SANS 10162:1-2005.* Durban, South Africa: Shades Technical Publications.

Peles, Y. (n.d.). Chapter 8: Internal Forced Convection. *Department of Mechanical, Aerospace and Nuclear Engineering Rensselaer Polytechnic Institute* . The McGraw-Hill Companies, Inc.

Plate-Type Evaporators. (2011). Retrieved March 4, 2013, from Refrigers.com: http://www.refrigers.com/content/view/31539/181/

R134a Refrigerant. (n.d.). Retrieved April 30, 2013, from Cool Mate: www.lyrefrigerant.com/1-r134a-refrigerant-1.html

Refrigerants - Environmental Properties. (n.d.). Retrieved May 1, 2013, from The Engineering ToolBox: www.engineeringtoolbox.com/Refrigerants-Environment-Properties-d_1220.html

Rising Film Evaporator. (2006). Retrieved March 4, 2013, from Genemco: http://www.genemco.com/aloe/rising.html

Seubert, C. (2013). *What is R404a Refrigerant?* Retrieved March 6, 2013, from eHow: http://www.ehow.com/facts_7437752_r404a-refrigerant_.html

Shanghai Metal Corporation. (2012). *Shanghai Metal Corporation*. Retrieved April 17, 2013, from SMC: www.shanghaimetal.com/

Shaoxing Tanle Trade Co., Ltd. (2012). *Kl-210 suction line accumulator*. Retrieved March 5, 2013, from Alibaba.com: http://spanish.alibaba.com/product-gs/kl-210-suction-line-accumulator-586603954.html

Smith, S. (2013). *How to Join Aluminium Tubing*. Retrieved April 22, 2013, from eHow: www.ehow.com/how_7189824_join-aluminium-tubing.html

South African Holiday: Tshwane's (Pretoria's) Climate. (n.d.). Retrieved March 20, 2013, from southafricanholiday.org.uk: http://www.southafricaholiday.org.uk/travel_tips/climate_tshwane.htm

Specific Systems. (2013). *Crankcase Heater*. Retrieved May 6, 2013, from Specific Systems: www.specificsystems.com/crankcase-heater/

Suliman, R., Liebenberg, L., & Meyer, J. (2009). Improved flow pattern map for accurate prediction of the heat transfer coefficients during condensation of R-134a in smooth horizontal tubes and within the low-mass flux range. *International Journal of Heat and Mass Transfer* , 5701-5711.

ThomasNet.com. (2013, February 23). Retrieved February 23, 2013, from Types of Heat Exchangers: http://www.thomasnet.com/articles/process-equipment/heat-exchanger-types

Turbinedar Co, Inc. (2009). *Evaporators*. Retrieved March 4, 2013, from Turbinedar: http://www.turbinedar.com/evaporator.htm

Types and applications of evaporators. (2010, February 28). Retrieved March 3, 2013, from Technology: tech.commfiles.com/types-and-applications-of-evaporators

Types of Evaporators. (2011). Retrieved March 4, 2013, from Refrigers.com: http://www.refrigers.com/content/view/31533/181/

White, F. M. (2011). *Fluid Mechanics, Seventh Edition.* Mc-Graw Hill: Singapore.

Yeh, R. (1999). *Compression Refrigeration System*. Retrieved March 18, 2013, from web.mit.edu/2.972/www/reports/compression_refrigeration_system.html

Appendix

Appendix A: Protocol and Progress Reports

Protocol

MOX 410 Project Protocol

Energy efficient chiller for the cooling of water in industrial and aerospace applications

Samantha Ayres
10261720

User Requirements

A chiller is to be designed in order to be used for air-conditioning, industrial and aerospace applications.

- The chiller must operate with a COP of 2.2 (Coefficient of Performance).
- 1000l/h Chilled water must be produced at 10°C with an inlet water temperature of 20°C.
- The ambient conditions are that of Pretoria.
- Standard components must be used for the compressor, pump, expansion valve and fan.
- The two heat exchangers (evaporator and condenser) must be designed, as well as the containing box and the entire system layout, as well as the supports.

Problem/Objective

The COP of a chiller is approximately 2 (and often, less than 2). A more efficient chiller is required and therefore a chiller with a greater COP. This increase in efficiency is better for the environment and from an energy point of view. A chiller with a COP of 2.2 is therefore required to be designed.

Methodology to solve the problem

In order to solve the problem, I will follow this procedure:

1. Perform calculations needed to determine standard components
2. Determine required inlet pressures and temperatures to design the heat exchangers
3. Ensure that the COP of the system is 2.2, or greater.
4. Design the entire system.
5. Design the heat exchangers.
6. Investigate different heat exchanger types.

Chapters

1. Introduction
2. Problem Statement and objective
3. User requirements
4. Literature study
5. Functional Analysis
6. Design Requirements/ Technical Specifications
7. Concepts
    a. Concept generation
    b. Concept selection
8. Detail Design
    a. Calculations
    b. Analysis
9. Manufacturing Analysis
10. Maintenance Analysis
11. Reliability Analysis
12. Qualification Requirements
13. Cost Analysis
14. Social, legal, health, safety and environmental impacts
15. Drawings (Compilation and four detail designs)

Deliverables

The outcomes of the project will be given in report format, accompanied by manufacturing drawings. A presentation will be done, highlighting the important information at the end of the course.

Project Plan

ID		Task Mode	Task Name	Duration	Start	Finish
1			Initial Discussion	1 day	Mon 13/02/11	Mon 13/02/11
2			Protocol Discussion	1 day	Wed 13/02/13	Wed 13/02/13
3			Protocol Refinement	4 days	Thu 13/02/14	Tue 13/02/19
4			Protocol Hand In	1 day	Fri 13/03/01	Fri 13/03/01
5			Define Technical Specifications	1 day	Mon 13/03/04	Mon 13/03/04
6			Concept Designs	4 days	Tue 13/03/05	Fri 13/03/08
7			Engineering Week	7 days	Sat 13/03/09	Mon 13/03/18
8			Detail Design - Calculations, Analysis	8 days	Wed 13/03/13	Fri 13/03/22
9			Manufacturing Analysis	1 day	Tue 13/03/26	Tue 13/03/26
10			Maintenance and Reliability Analysis	2 days	Thu 13/03/28	Fri 13/03/29
11			Qualification requirements	2 days	Tue 13/04/02	Wed 13/04/03
12			Cost Analysis	2 days	Thu 13/04/04	Fri 13/04/05
13			First Progress report	1 day	Fri 13/04/05	Fri 13/04/05
14			Social, legal, health, safety and environmental impacts	4 days	Mon 13/04/08	Thu 13/04/11
15			Second Progress Report	1 day	Fri 13/05/03	Fri 13/05/03
16			Detail Drawings	15 days	Mon 13/04/08	Fri 13/04/26
17			Engineering Week	7 days	Sat 13/05/04	Mon 13/05/13
18			Drawings for evaluation	1 day	Mon 13/05/13	Mon 13/05/13
19			Finish Report	14 days	Mon 13/04/22	Thu 13/05/09
20			Edit Report	2 days	Fri 13/05/10	Mon 13/05/13
21			Report hand in	5 days	Mon 13/05/27	Fri 13/05/31
22			Presentation	1 day	Fri 13/06/21	Fri 13/06/21

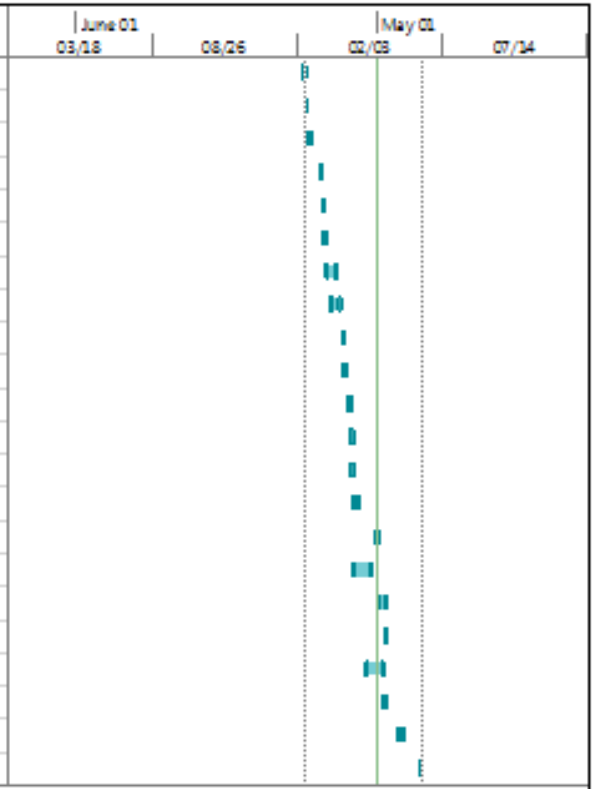

Project: Gantt Chart
Date: Thu 13/05/02

Task	Inactive Summary	External Tasks	
Split	Manual Task	External Milestone	
Milestone	Duration-only	Deadline	
Summary	Manual Summary Rollup	Progress	
Project Summary	Manual Summary	Manual Progress	
Inactive Task	Start-only		
Inactive Milestone	Finish-only		

First Progress Report

Student: Samantha Ayres
10261720

Study leader: Professor J.P. Meyer

Thus far, for my design project, I have completed concept generation and concept selection. I have started my detail design for the project and have determined which standard compressor and standard suction accumulator will be used. The literature study has been completed and the refrigerant used for the chiller will be R-134a.

I am behind on schedule, in that my detail design is not complete yet, but I have accommodated for this possibility with an extra two weeks to finish my report at the end of the semester. It has been difficult to complete the detail design by this point in time, because the information necessary to complete it has not been acquired as of yet. Further supervision into the calculations is needed.

The design components will be a helical-finned condenser which will be advantageous for space requirements, and will have high heat transfer rate due to the fins. The evaporator designed will be a double pipe heat exchanger which is folded onto itself, as to accommodate for space limitations.

Once the detail design is completed, I will begin the drawings, both on software and by hand. The remainder of the report is different analyses, including manufacturing, reliability, maintenance, quality, cost and social, legal and health effects.

I aim to spend more time on this design per week than previously, because the majority of the outsourced information will be collected already, and this takes time. It will be easier to complete the work once I have all of the information that I need. As I continue with this project, more problems may be encountered which will have to be dealt with. I hope to accommodate for this with the extra time I allocated at the end of the semester.

I now have a better understanding of what is required of me and I know which calculations to complete. Once these calculations are complete, I will be able to design my components, and then I will be able to complete the analyses.

Second Progress Report

Student: Samantha Ayres
10261720

Study leader: Professor J.P. Meyer

Thus far with my design project I have completed my detail design, manufacturing analysis, and maintenance analysis. I am a bit behind schedule because before the first progress report, I struggled to obtain the information that I needed to complete the work I had assumed would be done by then. This then caused me to be a bit behind schedule for this progress report.

I had originally allocated two weeks to completing my report, but as I have been editing along the way I will not need this much time. Therefore I will use most of this time to finishing the drawings and other analyses. I have begun the reliability and cost analysis, but the cost analysis is very difficult to complete as I am waiting on suppliers for prices as well as masses and therefore cannot complete these sections. This, however, involves entering values and therefore major calculations are not necessary. The only part of the detail design which still needs to be completed, is the calculation of the total mass, but as stated before, I am awaiting information from suppliers.

It has been very difficult to get information when I need it and thus this has slowed me down a bit. I can still complete my project in time, as the majority of the report is complete. I have also begun my CAD drawings and will complete these as soon as possible. The assembly drawing can only be done when I know the dimensions of all of the components so that I know where they can fit in order to minimise space wasting.

I could not complete the drawings prior to this time because I was not sure of the size of the components or how they would be manufactured. I have tried to catch up as much as possible since the last progress report, but I have seen that a major flaw in my time planning was that of assuming the detail design would take less time than it should. I should have allocated more time to this at the beginning of the semester. The detail design also took longer than expected, because even one small error can affect all of the calculations. For this reason, as well, I should have allocated more time to detail design.

This project has been a learning curve for me, because I have realised how important planning is. As this is my first big project which I have had to do, I did not know how long certain tasks would take. I do now, and therefore better planning can be done in the future. There is a month before the hand in is required and this is enough time to finish off the report and complete the drawings.

Appendix B: Meeting Log Card

DESIGN PROJECT - MOX 410

MEETING LOG CARD

Student Samantha **Student. no.** 10261720

Supervisor Professor J. P. Meyer

Design project Chiller

Date	Student signature	Supervisor signature	Comments
11 February			Initial discussion
13 February			Protocol discussion
26 February			Progress Meeting
1 March			Progress Meeting
9 April			Progress Meeting
23 April			Progress Meeting
9 May			Progress Meeting
16 May			Final Discussion

ADDITIONAL COMMENTS:

Appendix C: Additional Calculations

Condenser

Flow over a Circular Cylinder

The Reynolds number for the air at an assumed velocity of 2m/s

$$Re = \frac{VD}{\nu}$$
$$= \frac{2.5 \times 0.0127}{1.516 \times 10^{-5}}$$
$$= 2\,094$$

From table 7-1 (Cengel & Ghajar, 2011), for forced convection over a circular cylinder:

$$Nu = \frac{hD}{k} = 0.683 Pr^{\frac{1}{3}} Re^{0.466} \qquad for\ 40 < Re < 4\,000$$
$$= 0.683 \times 0.7309^{\frac{1}{3}} \times 2094^{0.466}$$
$$= 21.71$$

$$h = \frac{Nuk}{D}$$
$$= \frac{21.71 \times 0.02154}{0.0127}$$
$$= 42.9 \frac{W}{m^2} \cdot K$$

Fan

$$V_{max} = \frac{S_T}{S_T - D} V = \frac{0.0873}{0.0873 - 0.0127} \times 2.5 = 2.9256\ m/s$$

$$Re = \frac{V_{max} D}{\nu} = \frac{2.9256 \times 0.0127}{0.00001516} = 2451$$

$$f = \left(\frac{1}{-1.8 \log\left(\frac{6.9}{Re}\right)} \right)^2 = 0.0474 \qquad Smooth\ Tubes$$

$$\Delta P = f N \rho \frac{{V_{max}}^2}{2} = 23.012\ Pa$$

Appendix D: Drawings

DESIGN PROJECT - MOX 410

DRAWINGS FOR EVALUATION

Student Samantha Ayres **Student. no.** 10261720

Supervisor Professor J.P. Meyer

Design project Chiller

The following drawings must be submitted:

- One assembly drawing consisting of at least four different components as agreed upon between study leader and student.
- 2 x detailed CAD drawings of two different component indicating all necessary manufacturing detail to ensure correct functioning and assembly.
- 2 x detailed hand drawings of the other two components each indicating all necessary manufacturing detail to ensure correct functioning and assembly.

Drawings must be submitted on the due date for the deliverables stated in the study guide in the following formats:

- In an appendix as part of the two hardcopies and electronic copy as specified in section 11.3. Deliverables, in the study guide of this module and,
- A standalone document containing only the drawings

Drawing	Description
Assembly drawing	
Detail CAD 1	EVAPORATOR (COILED)
Detail CAD 2	CONDENSER
Detail Hand 1	DISTRIBUTOR
Detail Hand 2	BASE PLATE

Date 9 May 2013

Signatures:

Student

Supervisor

Appendix E: Data Sheets

Aluminium

ALUMINIUM

EURO STEEL

National Distributors of Stainless Steel and Aluminium

SHEET 1200 H14

Sizes (mm)	Theoretical Mass KG/sheet
2000 X 1000 X 0.5	2.79
2500 X 1250 X 0.5	4.36
2000 X 1000 X 0.7	3.91
2500 X 1250 X 0.7	6.10
2000 X 1000 X 0.9	5.02
2500 X 1250 X 0.9	7.85
2000 X 1000 X 1.2	6.74
2500 X 1250 X 1.2	10.46
3000 X 1500 X 1.2	15.01
2000 X 1000 X 1.6	8.93
2500 X 1250 X 1.6	13.95
3000 X 1500 X 1.6	20.09
2000 X 1000 X 2.0	11.16
2500 X 1250 X 2.0	17.44
3000 X 1500 X 2.0	25.11
2500 X 1250 X 2.5	21.80

ALUMINIUM

National Distributors of Stainless Steel and Aluminium

EXTRUDED TUBING

Round Tubing ALLOY 6063 T6

OD x WT
9.52 x 1.22
10 x 1.5
12.7 x 1.22 12.7 x 1.62
15.88 x 1.22 15.88 x 1.62
19.06 x 1.22 19.06 x 1.62
22.22 x 1.22 22.22 x 1.62
25.4 x 1.22 25.4 x 1.62 25.4 x 3.18
31.75 x 1.62 31.75 x 3.18
38.1 x 1.22 38.1 x 1.62 38.1 x 3.18
50.8 x 1.62 50.8 x 3.18

Compressor

Danfoss

Performance tables

R134a

Models	TE	-15		-10		-5		0		5		10		15		20	
	TC	P.F.	P.A.	P.F.	P.A.	P.F.	P.A.	P.F.	P.A.	P.F.	P.A.	P.F.	P.A.	P.F.	P.A.	P.F.	P.A.
MTZ 18	40	880	0.60	1 290	0.67	1 790	0.73	2 380	0.78	3 070	0.82	3 880	0.84	4 820	0.84	5 890	0.83
	50	660	0.62	1 010	0.70	1 430	0.78	1 930	0.85	2 520	0.92	3 220	0.97	4 030	1.01	4 960	1.03
	60	-	-	790	0.70	1 120	0.81	1 510	0.91	1 990	1.00	2 550	1.09	3 220	1.16	3 990	1.22
	70	-	-	-	-	-	-	-	-	-	-	1 890	1.18	2 400	1.30	3 000	1.40
MTZ 22	40	1 170	0.70	1 680	0.79	2 290	0.87	3 040	0.94	3 940	1.00	4 990	1.04	6 220	1.06	7 640	1.05
	50	910	0.73	1 340	0.83	1 870	0.93	2 510	1.03	3 280	1.11	4 200	1.18	5 280	1.23	6 530	1.26
	60	-	-	1 060	0.84	1 480	0.97	2 000	1.09	2 630	1.21	3 400	1.32	4 310	1.41	5 380	1.48
	70	-	-	-	-	-	-	-	-	-	-	2 610	1.44	3 330	1.57	4 200	1.69
MTZ 28	40	1 490	0.88	2 060	0.98	2 790	1.08	3 700	1.17	4 810	1.26	6 150	1.34	7 740	1.40	9 610	1.45
	50	1 240	0.93	1 720	1.05	2 340	1.17	3 120	1.29	4 080	1.41	5 260	1.52	6 660	1.62	8 330	1.71
	60	-	-	1 440	1.10	1 920	1.25	2 550	1.40	3 350	1.55	4 340	1.70	5 540	1.85	6 980	1.98
	70	-	-	-	-	-	-	-	-	-	-	3 400	1.87	4 380	2.06	5 570	2.25
MTZ 32	40	1 750	1.07	2 440	1.21	3 300	1.35	4 370	1.48	5 660	1.58	7 190	1.66	9 010	1.70	11 120	1.71
	50	1 400	1.10	1 990	1.27	2 740	1.44	3 670	1.60	4 800	1.74	6 160	1.86	7 780	1.95	9 680	2.01
	60	-	-	1 610	1.30	2 210	1.50	2 980	1.70	3 930	1.89	5 090	2.05	6 490	2.20	8 150	2.32
	70	-	-	-	-	-	-	-	-	-	-	3 990	2.24	5 150	2.44	6 550	2.63
MTZ 36	40	2 450	1.25	3 240	1.39	4 200	1.53	5 350	1.65	6 700	1.75	8 280	1.83	10 110	1.89	12 210	1.91
	50	2 050	1.33	2 760	1.50	3 610	1.67	4 630	1.83	5 840	1.97	7 260	2.10	8 910	2.21	10 820	2.29
	60	-	-	2 270	1.57	2 990	1.77	3 860	1.98	4 910	2.18	6 150	2.36	7 600	2.53	9 290	2.67
	70	-	-	-	-	-	-	-	-	-	-	4 940	2.60	6 180	2.84	7 630	3.06
MTZ 40	40	2 880	1.40	3 690	1.53	4 640	1.66	5 740	1.77	7 010	1.87	8 450	1.95	10 100	2.01	11 950	2.05
	50	2 470	1.52	3 210	1.68	4 080	1.84	5 080	2.00	6 240	2.15	7 560	2.28	9 070	2.40	10 770	2.49
	60	-	-	2 680	1.79	3 440	1.99	4 330	2.20	5 350	2.40	6 530	2.60	7 880	2.78	9 410	2.95
	70	-	-	-	-	-	-	-	-	-	-	5 350	2.89	6 530	3.15	7 870	3.40
MTZ 44	40	2 560	1.59	3 530	1.75	4 730	1.90	6 210	2.03	7 990	2.14	10 120	2.21	12 610	2.25	15 520	2.24
	50	2 020	1.64	2 850	1.83	3 880	2.02	5 150	2.20	6 700	2.36	8 560	2.49	10 770	2.60	13 350	2.66
	60	-	-	2 320	1.86	3 140	2.10	4 170	2.33	5 450	2.55	7 010	2.76	8 890	2.93	11 120	3.08
	70	-	-	-	-	-	-	-	-	-	-	5 510	2.99	7 020	3.25	8 860	3.49
MTZ 50	40	2 970	1.76	4 110	1.96	5 520	2.14	7 230	2.30	9 290	2.43	11 730	2.53	14 590	2.59	17 910	2.59
	50	2 340	1.81	3 330	2.04	4 550	2.27	6 040	2.49	7 850	2.68	10 010	2.85	12 560	2.98	15 540	3.08
	60	-	-	2 680	2.07	3 670	2.36	4 910	2.64	6 430	2.91	8 270	3.16	10 470	3.38	13 070	3.56
	70	-	-	-	-	-	-	-	-	-	-	6 510	3.43	8 320	3.75	10 500	4.04
MTZ 56	40	3 310	1.92	4 590	2.15	6 170	2.36	8 070	2.55	10 350	2.71	13 050	2.83	16 200	2.91	19 840	2.93
	50	2 600	1.97	3 720	2.24	5 100	2.50	6 780	2.76	8 800	2.99	11 210	3.19	14 040	3.35	17 330	3.47
	60	-	-	2 980	2.27	4 130	2.60	5 540	2.93	7 270	3.24	9 340	3.53	11 810	3.80	14 710	4.03
	70	-	-	-	-	-	-	-	-	-	-	7 510	3.84	9 570	4.22	12 040	4.57
MTZ 64	40	3 750	2.11	5 210	2.38	7 000	2.63	9 160	2.85	11 730	3.04	14 750	3.19	18 280	3.29	22 360	3.32
	50	2 930	2.16	4 220	2.47	5 810	2.79	7 730	3.08	10 030	3.36	12 750	3.60	15 940	3.80	19 640	3.94
	60	-	-	3 370	2.50	4 700	2.89	6 340	3.27	8 320	3.64	10 690	3.99	13 500	4.30	16 790	4.58
	70	-	-	-	-	-	-	-	-	-	-	8 640	4.34	11 030	4.79	13 860	5.20
MTZ 72	40	4 520	2.33	6 190	2.62	8 200	2.90	10 610	3.16	13 450	3.38	16 760	3.56	20 610	3.69	25 020	3.76
	50	3 490	2.29	4 990	2.66	6 800	3.03	8 960	3.39	11 530	3.74	14 540	4.05	18 050	4.34	22 090	4.57
	60	-	-	3 800	2.45	5 370	2.93	7 250	3.42	9 500	3.91	12 170	4.38	15 290	4.83	18 910	5.25
	70	-	-	-	-	-	-	-	-	-	-	9 680	4.49	12 380	5.13	15 540	5.76
MTZ 80	40	5 390	2.71	7 250	3.03	9 490	3.35	12 150	3.66	15 280	3.94	18 930	4.19	23 150	4.40	27 990	4.57
	50	4 340	2.79	6 000	3.17	8 010	3.56	10 390	3.94	13 210	4.31	16 520	4.65	20 350	4.97	24 760	5.25
	60	-	-	4 760	3.24	6 480	3.70	8 540	4.17	11 000	4.64	13 910	5.10	17 300	5.54	21 230	5.96
	70	-	-	-	-	-	-	-	-	-	-	11 100	5.53	14 010	6.10	17 410	6.66

Pump

Pump performance data		
MODEL: CM MAG-P4	Curve N°: 10362	Rev.:00
ITEM:	Power [kW]: ---	
Project:	1450 RPM	

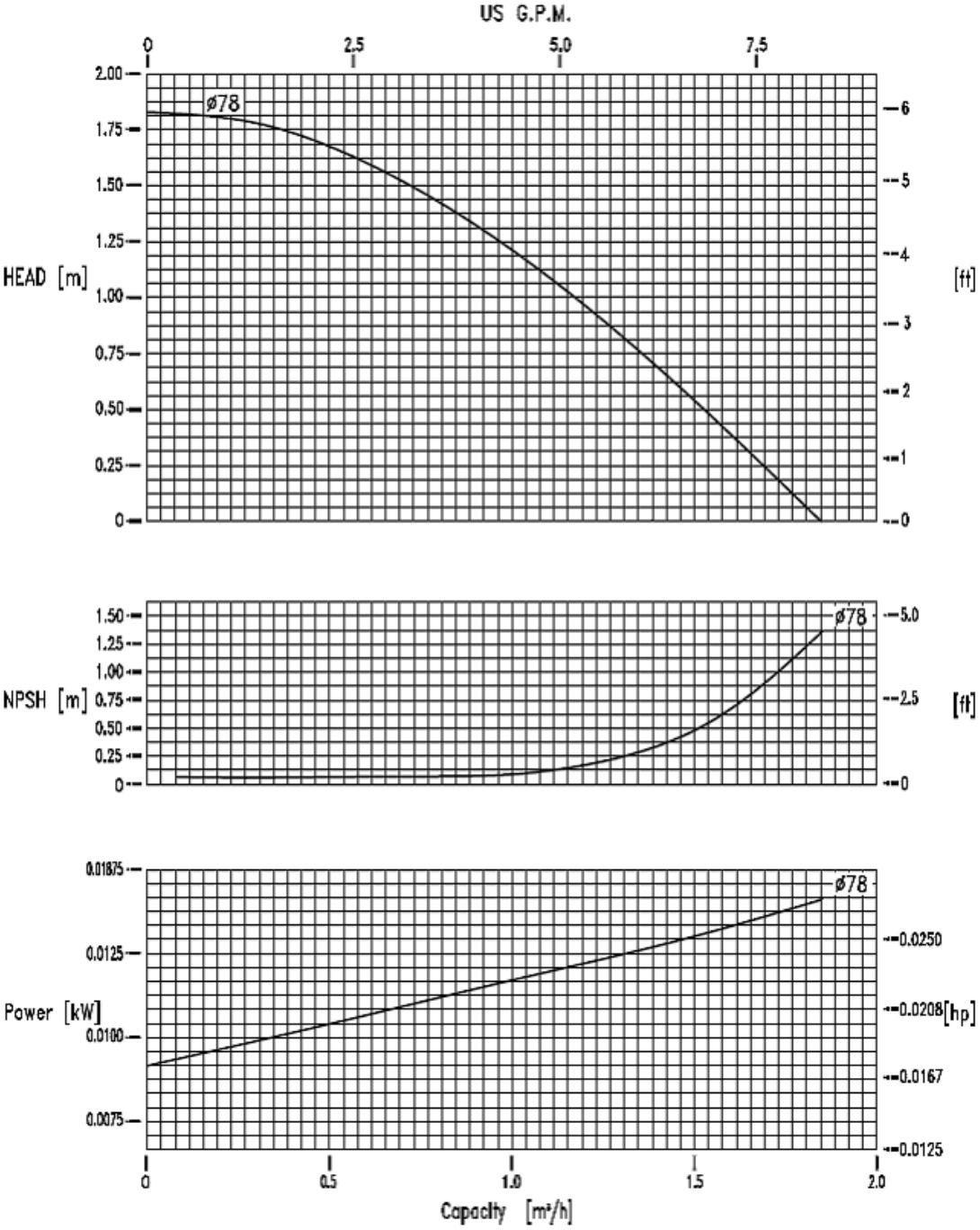

Suction Accumulator

Heldon

Suction Accumulators

Suction Accumulators

Recommended system practices for Halocarbon refrigerants according to the ASHRAE Handbook R02 – Refrigeration, take into consideration economic factors such as costs of materials and system efficiency. Pressure drop calculations for each segment of the system are based on change in saturation temperature of the refrigerant; in suction lines the total drop should be limited to 1 K in equivalent pressure loss.

A Worked Example

The standard range of Heldon accumulators have been sized to ensure no more than a ½ K temperature loss across them when they are within the Max kW ratings as called out on the table.
In order to select the correct model the following conditions should be established:

Determine the Evaporating Temperature (°C)
Type of Refrigerant used (e.g. R404A)
The total cooling load (kW)
Trapping Capacity (kg) of Refrigerant at -15 C

Data from the following chart may then be used to select;

Heldon New Part Number	Connection Size	Trapping Capacity kg	kW of Refrigeration (Max) R134a -10 C	R134a -5 C	R134a 0 C	R404A/R507 -40 C	R404A/R507 -20 C	R404A/R507 -5 C	R22 -40 C	R22 -20 C	R22 -5 C	R407C -20 C	R407C -5 C	R407C 5 C
3100-084010A	1/2" ODS	0.9	2.2	2.6	3.2	1.0	2.3	4.1	1.1	2.6	4.4	2.3	4.1	6.0
3100-104010A	5/8" ODS	0.9	4.1	5.0	6.1	1.8	4.4	7.9	2.1	5.0	8.5	4.3	7.9	11.3
3100-104017A	5/8" ODS	1.53	4.1	5.0	6.1	1.8	4.4	7.9	2.1	5.0	8.5	4.3	7.9	11.3
3100-124017A	3/4" ODS	1.53	11.8	14.3	17.2	4.0	9.4	16.2	6.5	14.5	24.1	7.9	16.7	23.4
3100-125024A	3/4" ODS	2.17	11.8	14.3	17.2	4.0	9.4	16.2	6.5	14.5	24.1	7.9	16.7	23.4
3100-145024A	7/8" ODS	2.17	12.6	15.5	18.8	5.5	13.6	24.0	6.5	15.2	26.1	13.3	24.2	34.7
3100-145040A	7/8" ODS	3.4	12.6	15.5	18.8	5.5	13.6	24.0	6.5	15.2	26.1	13.3	24.2	34.7
3100-185048A	1-1/8" ODS	4.3	25.0	30.5	37.1	11.0	26.8	47.5	13.0	30.2	51.5	26.3	47.8	68.3
3100-225048A	1-3/8" ODS	4.3	45.8	56.0	69.5	20.1	32.1	86.8	23.8	55.5	94.5	48.3	87.5	125.0
3100-266011A	1-5/8" ODS	10	76.0	93.0	113.0	33.4	81.5	143.6	39.7	92.3	160.0	80.0	145.1	206.8

Example:

Heldon New Part Number	Trapping Capacity kg	kW of Refrigeration (Max) R404A/R507 -40 C	-20 C	-5 C	
3100-145040A	3.4	5.5	13.6	24.0	Too Low
3100-185048A	4.3	11.0	26.8	47.5	
3100-225048A	4.3	20.1	32.1	86.8	Too High

Temperature

Selection

Capacity

1 For an R404A system at 30 kW duty, evaporating at -5 C and condensing at 40 C, follow the data for R404A/R507, select the nearest higher capacity for the system, in this case 47.5 kW

2 Next read across to the model designation for ordering information.

Ensure that the model selected has enough trapping capacity to hold 50% of the total system charge, in the selected model's case this will be 4.3 kg, so a total system charge of 8.6 kg.

Heldon Suction Accumulators

Dimensions and Capacities

Connector	Part Number	Volume (L)	Nominal Capacity kW @ +5c set & 30c sct, pressure drop = 7kPa R404A	R134a	R410A	DIA mm A	Dimensions mm B	mm C	mm D	Weight kg
1/2"	**3100-084010A**	1.0	10.20	5.80	9.80	102.0	168	143	63.5	1.27
5/8"	**3100-104010A**	1.0	11.40	8.70	12.40	102.0	165	143	63.5	1.27
5/8"	**3100-104016P**	1.6	11.40	8.70	12.40	102.0	218	194	43.5	1.9
5/8"	**3100-104017A**	1.7	11.40	8.70	12.40	102.0	279	254	63.5	2.1
5/8"	**3100-104019**	1.9	11.40	8.70	12.40	102.0	270	235	52.0	2.6
3/4"	**3100-124016P**	1.6	24.00	20.50	32.00	102.0	244	220	43.5	2.2
3/4"	**3100-124017A**	1.7	24.00	20.50	32.00	102.0	284	254	63.5	2.1
3/4"	**3100-125024A**	2.4	24.00	20.50	32.00	127.0	246	216	70.0	2.3
3/4"	**3100-125024P**	2.4	24.00	20.50	32.00	127.0	215	186	43.5	2.8
3/4"	**3100-125029P**	2.6	24.00	20.50	32.00	127.0	255	222	43.5	3.2
7/8"	**3100-145024A**	2.4	35.20	22.50	38.30	127.0	251	216	70.0	2.3
7/8"	**3100-145034P**	3.4	35.20	22.50	38.30	127.0	285	245	43.5	3.5
7/8"	**3100-145040**	4.0	35.20	22.50	38.30	127.0	368	328	70.0	3.8
7/8"	**3100-145040A**	3.7	35.20	22.50	38.30	127.0	374	340	70.0	3.22
1 1/8"	**3100-185040**	4.0	60.00	44.00	71.00	127.0	360	315	70.0	3.8
1-1/8"	**3100-185048A**	4.8	60.00	44.00	71.00	127.0	466	429	70.0	3.8
1 1/8"	**3100-185559**	5.9	60.00	44.00	71.00	140.0	430	385	75.0	6.2
1 1/8"	**3100-186055P**	5.5	60.00	44.00	71.00	160.0	340	290	60.5	5.9
1 1/8"	**3100-186063P**	6.3	60.00	44.00	71.00	160.0	420	370	60.5	6.8
1-3/8"	**3100-225048A**	4.8	110.00	86.30	120.00	127.0	470	430	70.0	3.8
1 3/8"	**3100-226071P**	7.1	110.00	86.30	120.00	160.0	460	406	60.5	7.4
1 3/8"	**3100-226563**	6.3	110.00	86.30	120.00	160.0	350	305	85.0	6.2
1-5/8"	**3100-266011A**	11.0	190.00	136.00	208.00	160.0	680	635	75.0	10.3
1 5/8"	**3100-266510**	10.5	190.00	136.00	208.00	160.0	575	525	85.0	9.3
2 1/8"	**3100-346013P**	13.0	195.00	141.00	215.00	160.0	874	820	70.5	14.0
2 1/8"	**3100-348615**	15.0	195.00	141.00	215.00	219.0	533	499	123.0	13.3
2 5/8"	**3100-421125**	25.0	200.00	150.00	221.00	273.0	522	461	165.0	16.0
3 1/8"	**3100-501135**	35.0	204.00	156.00	225.00	273.0	683	623	165.0	23.0

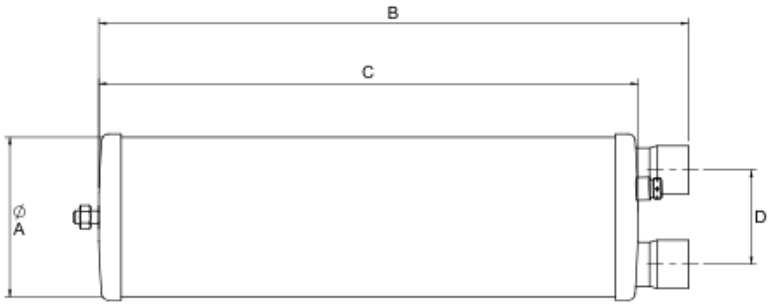

Note: All Heldon Suction Accumulators are to be mounted vertically.

Capillary Tubes

Danfoss Programme

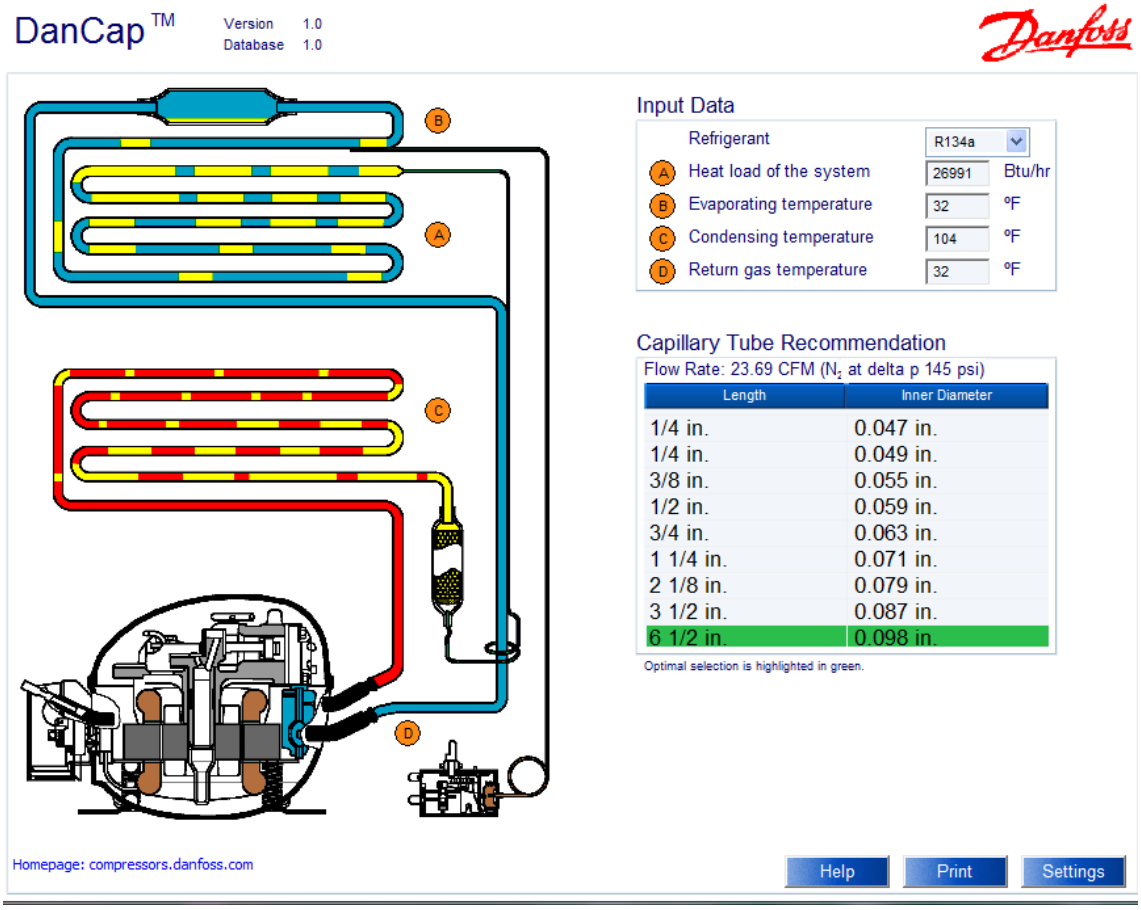

Cubigel - Capillary Tube Selection Table

Recommendations for the determination of capillary tube size

Table considers condensing temperature T_c = 45 °C. Non adiabatic flow in capillary...
Increase length 2% per each K of increase of condensing temperature...

TABLE FOR REFRIGERANT R134a (HMBP)																	
Capillary tube length (m)																	
Q_{ASH}	M	Capillary tube internal diameter (mm) & Evaporating temperature (°C)															
		0,7		0,8		0,9		1		1,2		1,5		1,7		2	
kcal/h	kg/h	-5	7,2	-5	7,2	-5	7,2	-5	7,2	-5	7,2	-5	7,2	-5	7,2	-5	7,2
100	2,32	4,11	3,86														
110	2,56	3,40	3,20														
120	2,79	2,88	2,71														
130	3,02	2,45	2,31														
140	3,25	2,12	2,00	4,30	4,04												
150	3,49	1,84	1,74	3,77	3,55												
160	3,72	1,62	1,53	3,32	3,12												
170	3,95	1,43	1,35	2,93	2,76												
180	4,18	1,27	1,21	2,63	2,48												
190	4,42	1,14	1,08	2,36	2,23	4,43	4,16										
200	4,65			2,13	2,00	3,99	3,76										
220	5,11			1,75	1,65	3,31	3,12										
240	5,58			1,47	1,40	2,78	2,63	4,88	4,59								
260	6,04			1,24	1,18	2,36	2,23	4,15	3,91								
280	6,51			1,06	1,02	2,04	1,93	3,60	3,40								
300	6,97					1,77	1,68	3,13	2,96								
320	7,44					1,55	1,47	2,75	2,60								
340	7,90					1,36	1,30	2,42	2,29								
360	8,37					1,21	1,15	2,17	2,06								
380	8,83					1,08	1,03	1,94	1,84	5,19	4,89						
400	9,30							1,74	1,66	4,67	4,42						
450	10,46							1,36	1,30	3,69	3,48						
500	11,62							1,09	1,05	2,99	2,83						
550	12,78									2,46	2,33						
600	13,95									2,05	1,95						
650	15,11									1,73	1,65	5,83	5,50				
700	16,27									1,47	1,42	5,00	4,73				
750	17,43									1,28	1,23	4,38	4,15				
800	18,60									1,11	1,08	3,84	3,64				
850	19,76											3,39	3,22				
900	20,92											3,00	2,86				
1000	23,25											2,40	2,30	4,80	4,54		
1100	25,57											1,98	1,90	3,94	3,74		
1200	27,89											1,64	1,58	3,28	3,12		
1300	30,22											1,37	1,33	2,79	2,66		
1400	32,54											1,16	1,13	2,38	2,29		
1500	34,87													2,05	1,98	5,01	4,76
1600	37,19													1,78	1,72	4,42	4,21
1700	39,52													1,55	1,51	3,90	3,72
1800	41,84													1,36	1,33	3,45	3,31
1900	44,17													1,20	1,18	3,08	2,95
2000	46,49													1,06	1,05	2,75	2,65
2250	52,30															2,12	2,06
2500	58,11															1,66	1,63
2750	63,92															1,35	1,33
3000	69,74															1,09	1,10

Fan

AMS

BS848:Part 1, 1980
Part 2 1985
Type D Installation

AXIAL FLOW FANS PERFORMANCE DATA

Size **500**
16 rev/sec

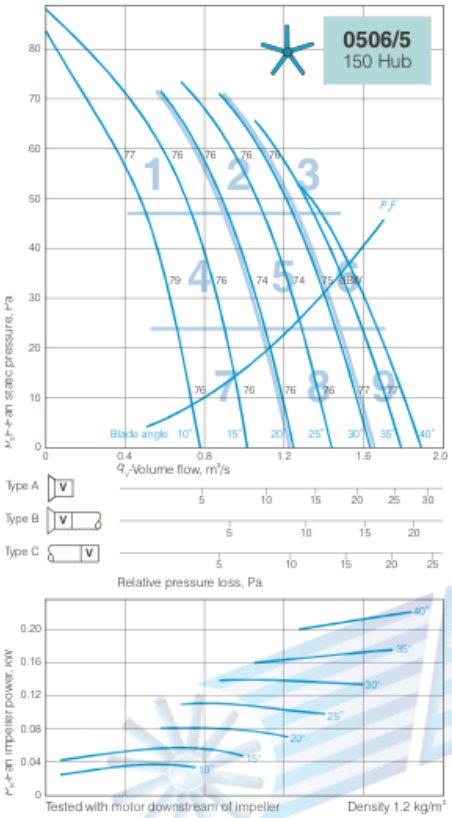

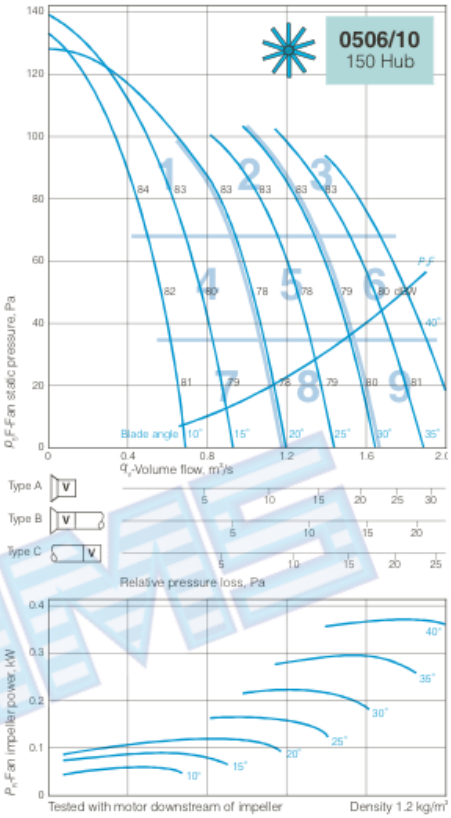

C AXIAL PERFORMANCE DATA

SOUND DATA

Zone	In-Duct dB	Total	In-Duct Spectrum Corrections, dB 63	125	250	500	1k	2k	4k	8k	dB(A)
1	Inlet	+3	4	13	9	8	9	13	20	33	5
	Outlet	0	5	9	7	7	9	15	19	28	5
2	Inlet	+3	2	12	10	10	11	15	20	32	7
	Outlet	0	5	10	9	8	9	13	17	25	5
3	Inlet	+1	4	8	9	10	11	13	17	28	6
	Outlet	0	4	8	8	9	10	15	17	26	6
4	Inlet	+2	5	15	7	6	10	17	26	32	6
	Outlet	0	5	12	7	7	10	14	19	26	5
5	Inlet	+4	2	14	11	9	12	13	20	34	7
	Outlet	0	5	12	8	8	9	12	17	27	5
6	Inlet	+2	3	14	8	7	12	13	18	30	6
	Outlet	0	4	9	7	8	9	17	21	27	6
7	Inlet	+2	5	12	8	7	9	12	20	34	5
	Outlet	0	5	8	8	7	8	12	20	28	4
8	Inlet	+4	2	13	10	9	12	13	20	34	7
	Outlet	0	5	11	7	7	8	11	17	27	4
9	Inlet	+2	3	11	8	9	12	13	18	32	6
	Outlet	0	6	8	7	6	10	15	20	27	5

For Free Field conditions apply the following corrections to the In-Duct figures.
All figures are negative unless otherwise stated.

All	In/Out	O/A	10	6	2	0	0	0	0	0	O/A

SOUND DATA

Zone	In-Duct dB	Total	In-Duct Spectrum Corrections, dB 63	125	250	500	1k	2k	4k	8k	dB(A)
1	Inlet	1	16	6	6	5	10	18	30	41	5
	Outlet	0	10	9	5	6	11	14	24	32	5
2	Inlet	0	8	8	6	7	9	14	23	37	5
	Outlet	0	10	8	5	7	10	13	20	30	5
3	Inlet	2	8	7	6	7	8	11	18	29	4
	Outlet	0	6	7	6	6	9	15	22	30	5
4	Inlet	1	7	15	6	5	9	16	25	37	5
	Outlet	0	9	7	6	5	9	12	21	30	4
5	Inlet	+1	2	14	11	9	12	13	20	34	7
	Outlet	0	9	10	8	7	8	9	16	28	3
6	Inlet	1	3	14	9	7	11	12	18	31	5
	Outlet	0	6	7	6	7	10	12	20	28	5
7	Inlet	0	9	11	6	6	8	11	17	35	4
	Outlet	0	9	10	6	6	10	12	20	32	5
8	Inlet	+1	7	10	6	7	7	10	17	33	3
	Outlet	0	8	9	7	6	8	9	17	28	3
9	Inlet	0	7	10	7	7	7	10	16	31	3
	Outlet	0	6	8	8	9	8	11	19	29	4

For Free Field conditions apply the following corrections to the In-Duct figures.
All figures are negative unless otherwise stated.

All	In/Out	O/A	10	6	2	0	0	0	0	0	O/A

COMPONENT WEIGHTS

IMPELLER WEIGHTS

Table 5.
Approximate impeller weights

Number of blades	Hub Dia. mm	Max. Dia. mm	Weight, kg GRP	Nylon	Alum.	Anti-static
5	150	900	1.1	1.8	2.6	1.1
10	150	900	2.1	2.5	4.1	2.1
7	250	1000	3.3	3.6	4.9	3.3
14	250	1000	4.2	4.7	7.3	4.2
3	255	1300	5.0		7.9	5.2
6	255	1300	6.3		11.9	6.6
3	350	1400	9.5		12.6	11.1
6	350	1400	10.8		16.6	12.5
9	350	1400	12.1		20.6	14.0
12	350	1400	13.4		24.6	
3	400	1800	19		27	
6	400	1800	24		40	
9	400	1800	29		53	
3	550	2000	25		33	
6	550	2000	30		46	
9	550	2000	35		58	
12	550	2000	40		71	

MOTOR WEIGHTS

Table 6.
Approximate motor weights

Motor Frame	Shaft Dia. mm	App. wt. kg	Motor kW ratings r/s 48	24	16	12
D71	14	6	0.37	0.37		
D71	14	9	0.55			
D80	19	9	0.75	0.55	0.37	
D80	19	10	1.1	0.75	0.55	
D90S	24	13	1.5	1.1	0.75	
D90L	24	16	2.2	1.5	1.1	0.55
D100L	28	29	3	2.2	1.5	0.75
D100L	28	31		3		1.1
D112M	28	43	4	4	2.2	1.5
D132S	38	68	5.5/7.5	5.5	3	2.2
D132M	38	79		7.5/10	4/5.5	3
D160M	42	120	11/15	11	7.5	4/5.5
D160L	42	140	18.5	15	11	7.5
D180M	48	190	22	18.5		
D180L	48	200		22	15	11
D200L	55	290	30/37	30	18.5/22	15
D225S	55/60	360		37		18.5
D225M	55/60	370	45	45	30	22
D250S	60/70	520			37	30
D250M	60/65	660	55	55	45	37
D280S	65/70	600	75	75	55	45
D280M	65/80	650	90	90	75	55

MOTOR kW RATINGS

Frame Size	Number of poles 2	4	6	8
D71	0.37/0.55	0.37	-	-
D80A	0.75	0.55	0.37	-
D80A	1.1	0.75	0.55	-
D90S	1.5	1.1	0.75	-
D90L	2.2	1.5	1.1	0.55
D100L	3.0	2.2	1.5	0.75
D100L	-	3.0	-	1.1
D112M	4.0/5.5	4.0	2.2	1.5
D132S	5.5/7.5	5.5	30.	2.2
D132M	-	7.5/10.0	4.0/5.5	3.0
D160M	11.0/15.0	11.0	7.5	4.0/5.5
D160L	18.5	15.0	11.0	7.5
D180M	22.0	18.5	-	-
D180L	-	22.0	15.0	11.0
D200L	30.0/37.0	30.0	18.5/22.0	15.0
D225S	-	37.0	-	18.5
D225M	45.0	45.0	30.0	22.0
D250S	-55.0	-	37.0	30.0
D250M	75.0	55.0	45.0	37.0
D280S	75.0	75.0	55.0	45.0
D280M	90.0	90.0	75.0	55.0

NOTE: To determine the weight of any selection refer to p. C-98/99 where detailed casing, impeller and motor weights are listed. The total weight is the sum of all three components. Motor ratings and speeds, other than those shown, can be provided. Two-speed motors are also available.

NOTE: When the BFA series fan is mounted horizontally, the cooling tunnel should be in the vertical plane when installed. Refer to p. C-5 for special notes that affect selection.

NOTE: Dimensions and weights are subject to change without notice. Refer to your nearest AMS office.

AP & APS: Standard case lenghts up to D132 Motor Frame.

APB: Standard case lengths up to D132 Motor Frame.

BFA: Case lenghts for Motor Frame sizes.

COMPONENT WEIGHTS

Detailed below are the weights of the components that make up various products, the details have been broken up as follows: -

Housing/Casing Weights

- Table 1. – Single stage axial flow fans – AP & APS Series
- Table 2. – Belt driven axial flow fans – APB Series
- Table 3. – Bifurcated axial flow fans – BFA Series
- Table 4. – High Capacity and Smoke Spill Roof Units – HC & SS

Impeller Weights

- Table 5. – impeller weights from 315 to 2000mm diameter

Motor Weights

- Table 6. – motor weights

Note:- refer to AMS for any fan/motor combination not listed.

Example

To determine the weight of an AP Series axial flow fan - 1400mm diameter, 6 pole with 9 blade aluminium impeller 400 dia. hub and 30kW motor.

1. Casing weight, Table 1. p. C-98 for D225M motor frame	256
2. 9 blade impeller weight, Table 5. p. C-99	53
3. 30kW, 16 rev/sec motor Frame Size D225M, Table 6. p. C-99	370
	679kg

Reminder Note: As motor weights can vary by a factor of 1.5:1 from one manufacturer to another, please check with our Sales Engineers if the unit weight is critical to the building design.

HOUSING/CASING WEIGHTS

Table 1.

AP & APS Series - single stage axial flow fans
AP..CR Series - single stage × 2

Model	Motor Frame Size D..							
AP, APS	80/ 90	100/ 112	132	160 180	200	225	250	280
031	10	15						
040	13	18						
050	16	23						
056	19	27	31					
063	22	30	34					
071	26	35	39					
080	29	40	44	57				
100	47	64	69	89				
125			88	172	209	227	239	283
140			99	193	235	256	269	319
160			113	221	270	294	310	367
180			235	292	347	374	392	457
200			261	325	386	417	437	510

Table 2.

APB Series - belt drive axial flow fans

Model	Motor Frame Size D..				
APB	80/90	100/112	132	160/180	200/225/ 250
031	14	26			
040	17	30			
050	20	35			
056	23	39	43		
063	26	42	46		
071	30	48	51		
080	33	55	56	86	
100			81	118	
125			98	200	296
140			110	225	325
160			125	250	370
180			247	321	455
200			273	354	506

Table 3.

BFA Series - bifurcated axial flow fans

Model	Motor Frame Size D..				
BFA	80//90	100/112	132	160/ 180	200/ 225
040	26				
050	32				
056	36	44	47		
063	41	48	52		
071	47	56	59		
080	53	66	66		
100	83	98	103	138	278
125		122	128	171	346

Table 4.

RSS Series - High Capacity & Smoke Spill axial flow roof units

Model	Motor Frame Size D..							
HC, SS	80/ 90	100 112	132	160/ 180	200	225	250	280
050	38	45						
056	40	47	51	60				
063	54	62	67	77				
071	60	69	73	84				
080	70	84	85	99				
100		122	127	147	238	252		
125		154	161	262	300	328		
140			192	310	350	371	384	435
160			227	362	410	433	449	506
180			361	418	473	500	518	583

ADJUSTABLE PITCH AXIAL FLOW FANS - DIMENSIONS

AP, EA & AF SERIES

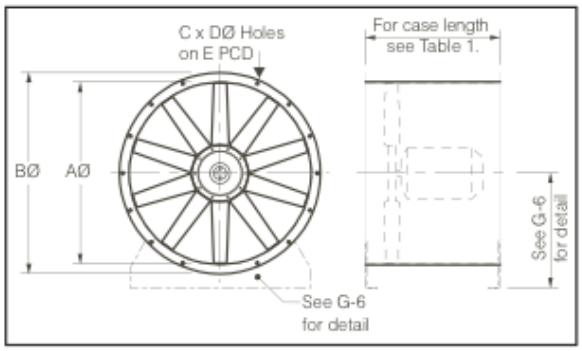

APB SERIES

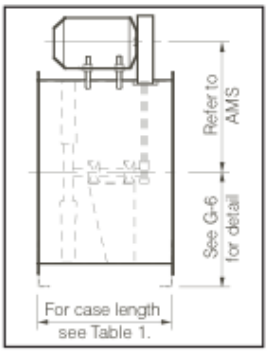

BFA SERIES

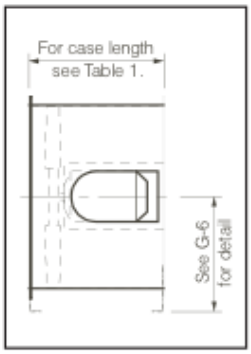

Model AP./EA./ AF.	AØ	BØ	C	DØ	E	Table 1. Casing length: Long(L) / Short(S) case 100 L/S	112 L/S	132 L/S	160 L/S	180 L/S	200 L/S	225 L/S	APB	BFA
031	315	375	8	10	355	300/180							400	
040	400	475	8	12	450	400/190	500/190						400	450
050	500	585	12	12	560	400/-	500/250						600	450/570
056	560	645	12	12	620	400/-	500/250	570/300					600	450/570
063	630	715	12	12	690		500/250	570/300					600	570
071	710	795	16	12	770		500/250	570/300	790/420	790/500			600	570
080	800	885	16	12	860		560/300	560/300	790/420	790/500			600	570/710
090	900	1000	16	15	970		560/300	560/300	790/420	790/500	840/550		600	570/710
100	1000	1100	16	15	1070		560/-	560/300	790/420	790/500	840/550		800	570/790/ 840
112	1120	1240	20	15	1190			590/400	790/420	790/500	840/550			
125	1250	1350	20	15	1320			590/400	790/420	790/500	840/550	1000/590		790/840/ 1000
140	1400	1540	20	15	1470			590/400	790/420	790/500	840/550	1000/590		
160	1600	1730	24	19	1680				790/420	790/500	840/550	1000/590		
180	1800	1930	24	19	1880				790/420	790/500	840/550	1000/590		
200	2000	2130	24	19	2080				790/420	790/500	840/550	1000/590		

Donkin (Howden Select)

Majax-2 710 - Dimensions (mm) & Masses (kg)

Direct Drive Fans

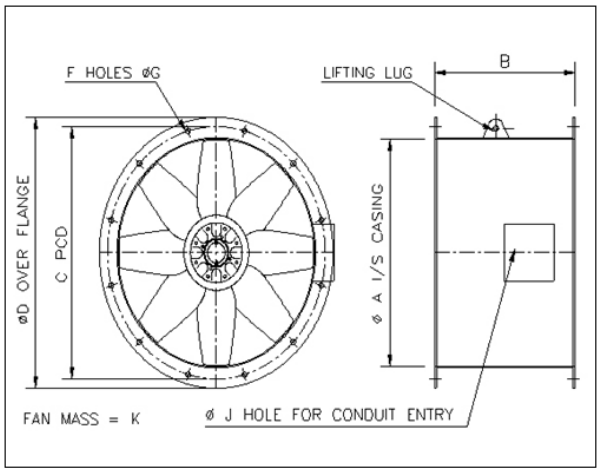

Belt Drive Fans

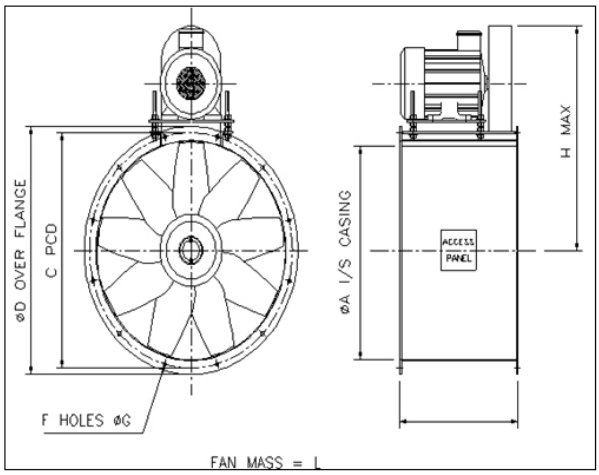

FAN SIZE dia A	Direct Drive Fan Speed (rpm) - Motor Power (kW)				BELT DRIVE Motor Power										
	2880	1440	960	720	kW	B	C	D	F	G	H	I	J	Mass K	Mass L
710	-	0.55 to 1.5	0.55 to 1.2	0.27	0.55 to 0.75	400	770	817	16	13	689	500	22	54	75
	-	2.2 to 4.0	1.5 to 2.2	0.75 to 1.5	1.1 to 1.5	400	770	817	16	13	742	500	22	89	84
	-	5.5 to 7.5	3.0 to 5.5	-	2.2 to 4.0	500	770	817	16	13	804	500	22	123	116
	-	-	-	-	5.5 to 7.5	-	770	817	16	13	841	500	-	-	149

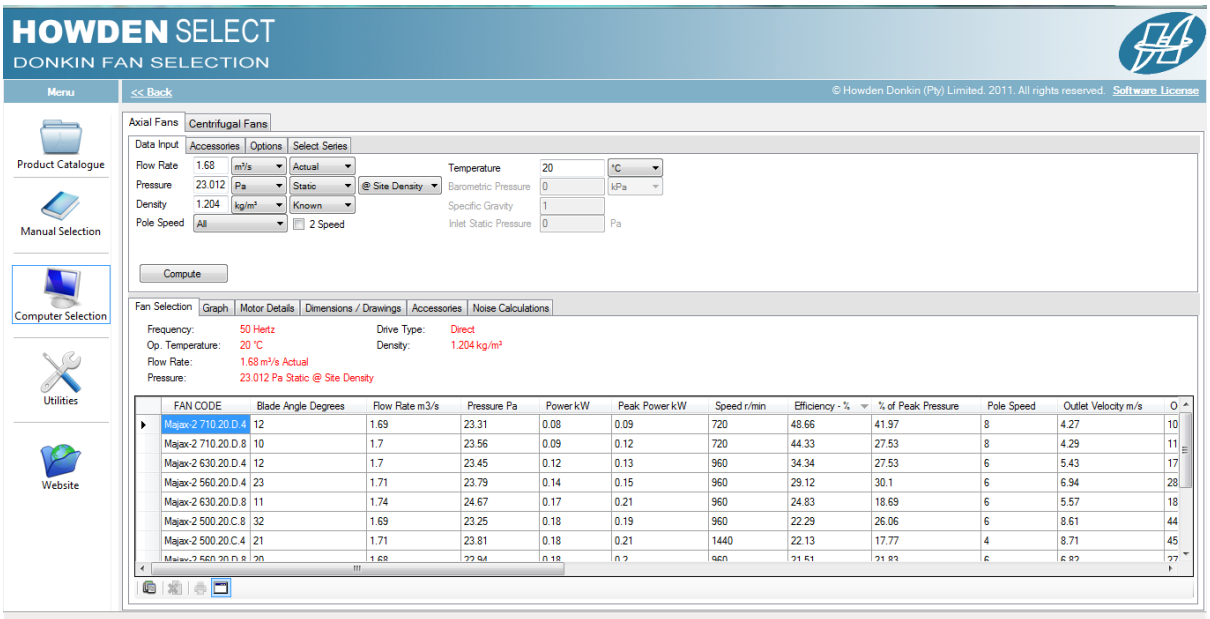

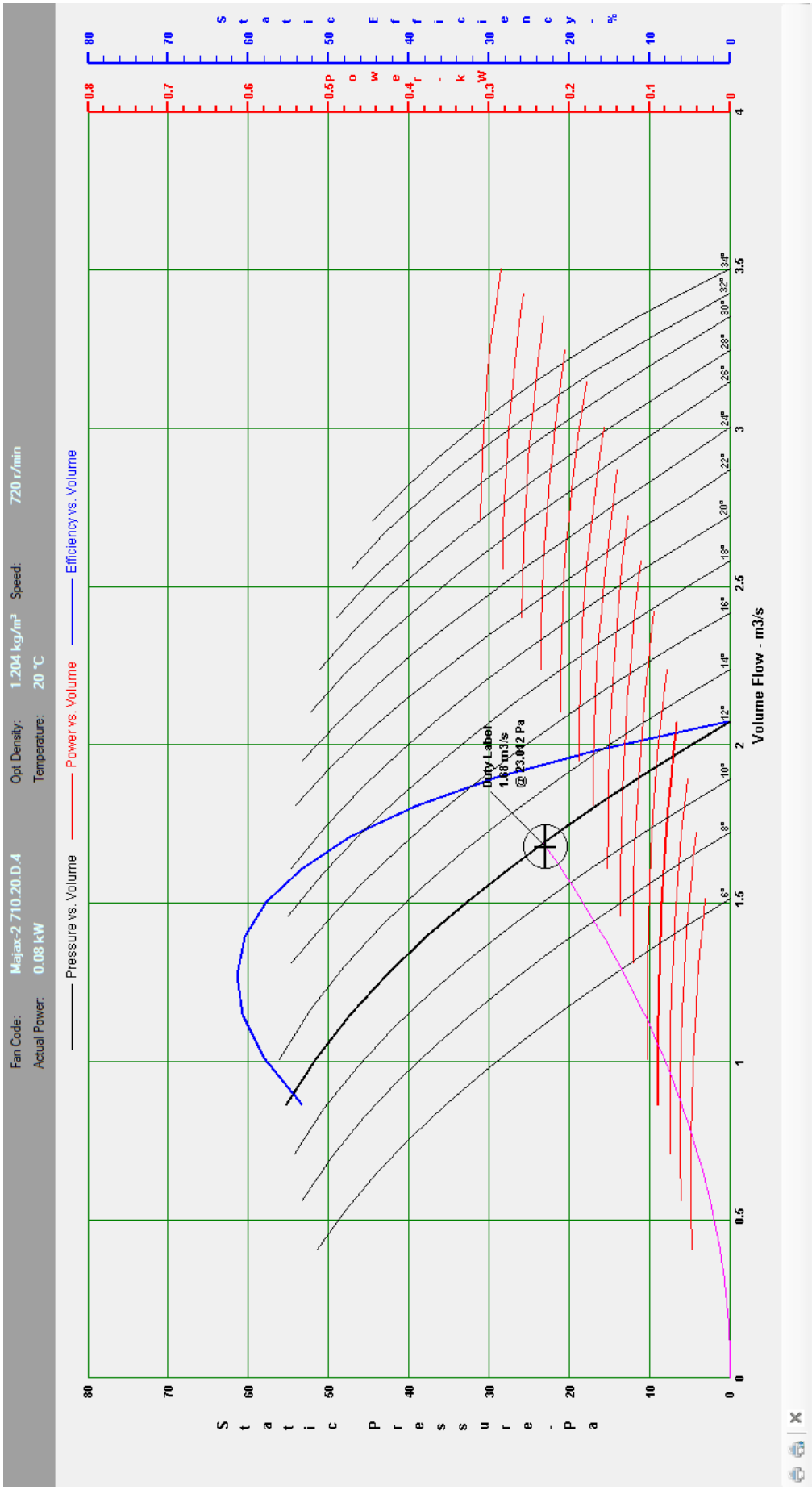
Fan Code: Majax-2 710.20.D.4
Actual Power: 0.08 kW
Opt Density: 1.204 kg/m³
Temperature: 20 °C
Speed: 720 r/min
Pressure vs. Volume
Power vs. Volume
Efficiency vs. Volume
Static Pressure - Pa
Static Efficiency - %
Power - kW
Volume Flow - m3/s
Duty Label
1.68 m3/s
@ 23.042 Pa