Geometric Optimisation of Heat Transfer in Channels using Newtonian and Non-Newtonian Fluids

Marc Stocks

Prof T Bello-Ochende

Prof JP Meyer

Department of Mechanical and Aeronautical Engineering

University of Pretoria

Introduction

- Background
- Methodology
- Numerical Model
- Mesh Refinement
- Results
- Conclusion

Background

Non-Newtonian Fluid

- Slurries; Blood; Corn Starch; Ketchup…
- Micro-structure

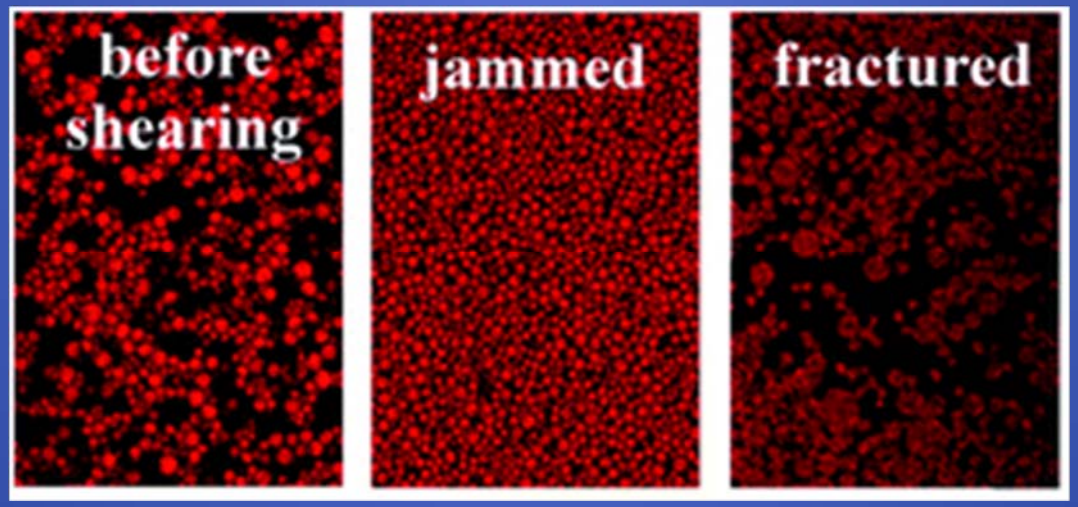

Background

Non-Newtonian Fluid

- Viscosity: Non-linear stress-strain relationship

$$\mu(\dot{\gamma}) = K\dot{\gamma}^{n-1}$$

- $n < 1$ - Pseudoplastic (Shear Thinning)
- $n > 1$ - Dilatant (Shear Thickening)
- $n = 1$ - Newtonian (Linear)

Background

Complex Flow Structures

Dendritic / Tree Structures

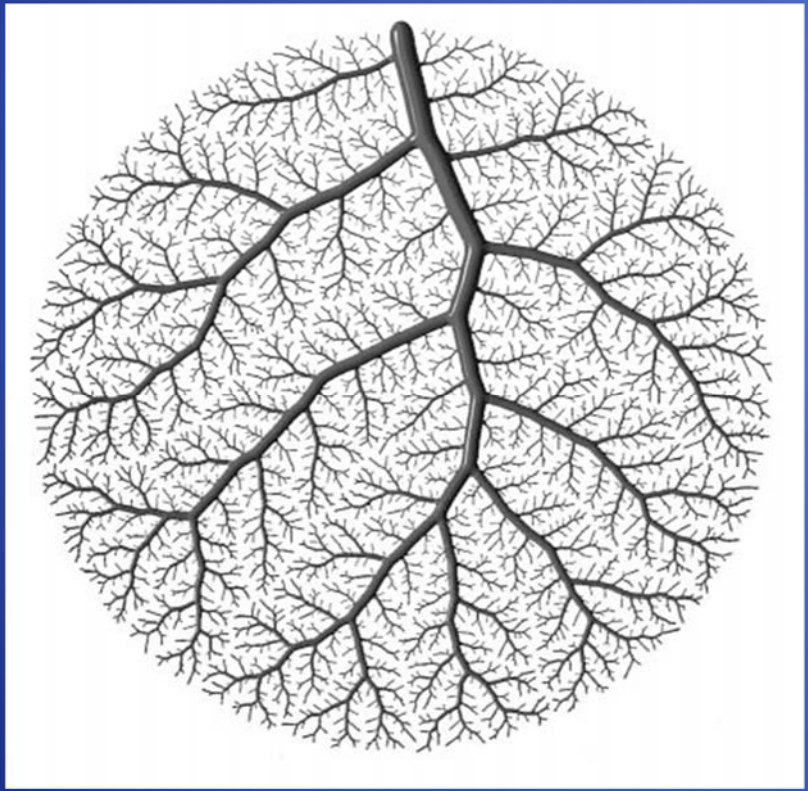

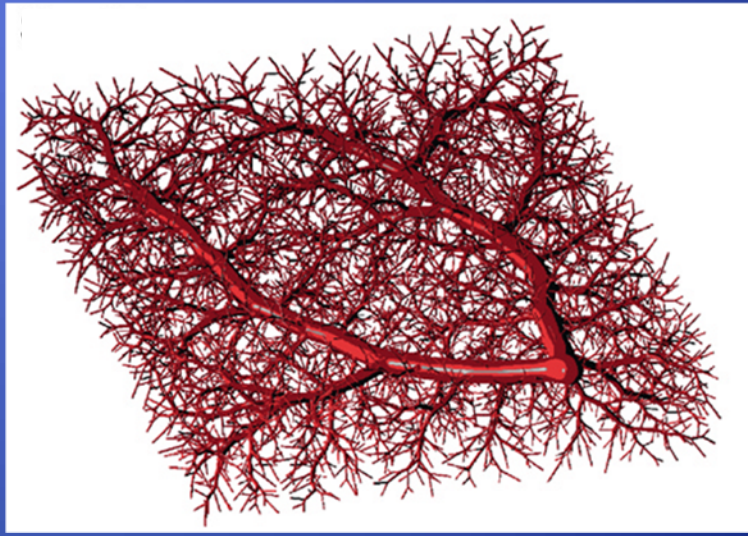

Methodology

Simple Micro-channel

- Non-Newtonian flow and Heat Transfer
- 2D Geometric Optimisation

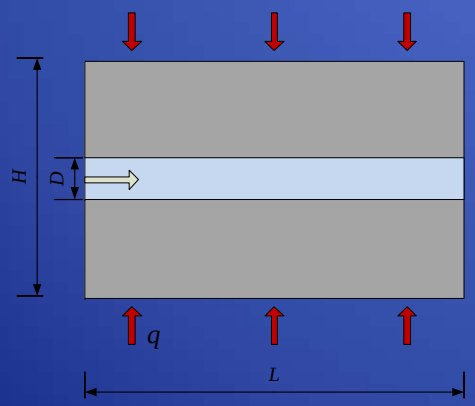

Complex Micro-channel

- Non-Newtonian Flow and Heat Transfer
- 3D Geometric Optimisation

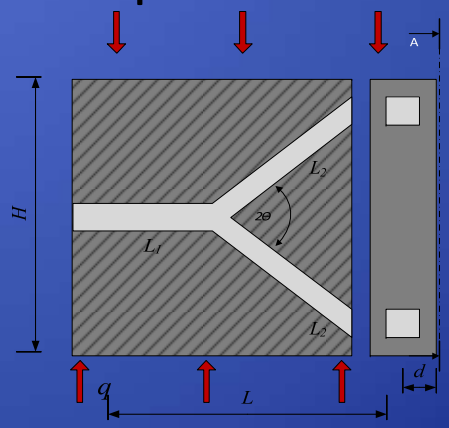

Numerical Model

Governing Equations

- Conservation of Mass

$$\nabla\left(\rho\vec{U}\right) = 0$$

- Conservation of Momentum

$$\rho\left(\vec{U}\cdot\nabla\vec{U}\right) = -\nabla P + \mu\nabla^2\vec{U}$$

- Conservation of Energy

$$\rho\frac{DE}{Dt} = div(k\nabla T) + \Phi$$

Numerical Model

Governing Equations

- StarCCM+ (CFD Software)

- Discretise (Governing Equations)

  Finite Volume Method

- Semi-Implicit Method for Pressure-Linked Equations (SIMPLE)

Numerical Model

Optimisation

Objective Function – Thermal Conductance

- Dimensionless

$$C = \frac{q'' L}{k_f (T_{max} - T_{in})}$$

- 2D

$$C = \frac{q}{A^{1/2} k_f \Delta T}$$

- 3D

$$C = \frac{q}{V^{1/3}\, k_f \Delta T}$$

Numerical Model

Automation

- StarCCM+ (Java based)
  - Java Macro (for Automation)
    - Generate and Export Geometries (Para Solid)
    - Iterate Geometries
    - Iterate Velocities
    - Mesh and Solve
    - Export Results for Optimisation

Numerical Model

2D Simple Micro-channel

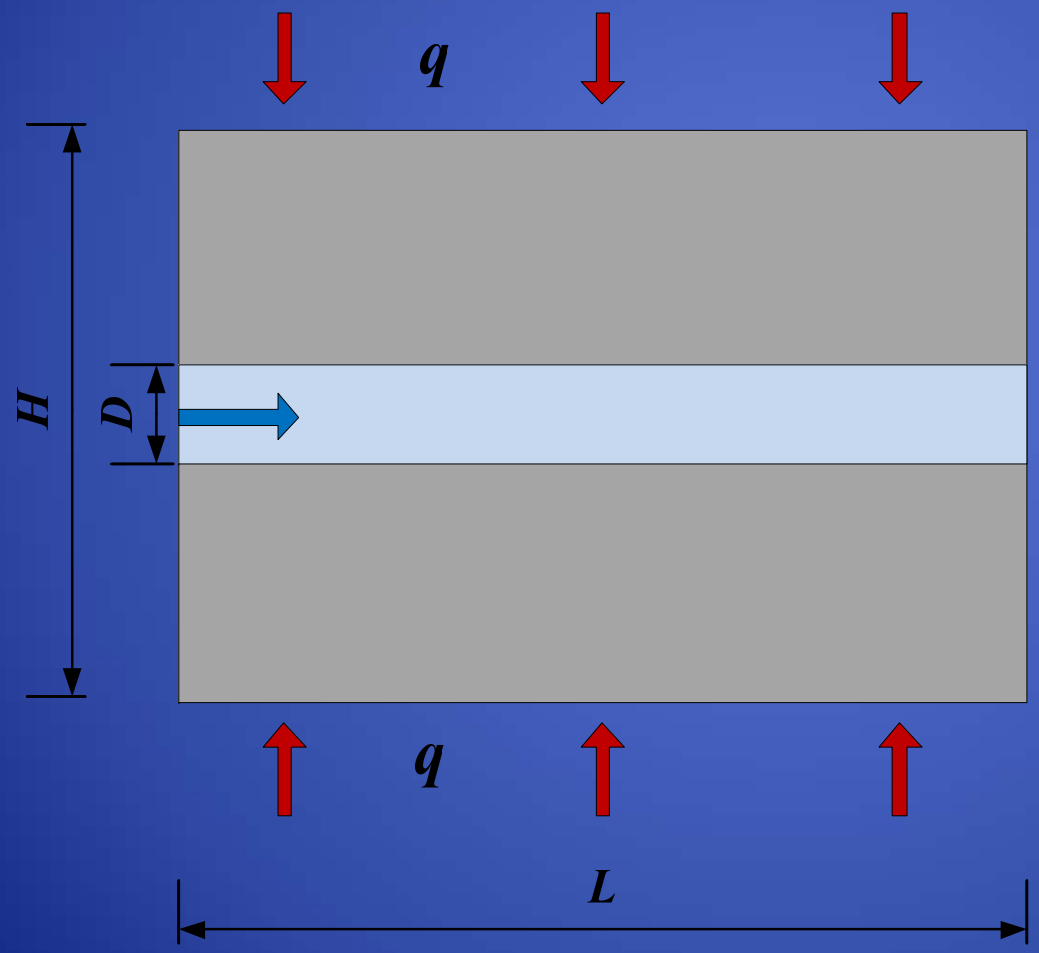

Porosity

$$\varphi = \frac{A_s}{A_t}$$

Channel Height

$$D = \frac{A_t}{L}(1 - \varphi)$$

Numerical Model

3D Complex Micro-channel

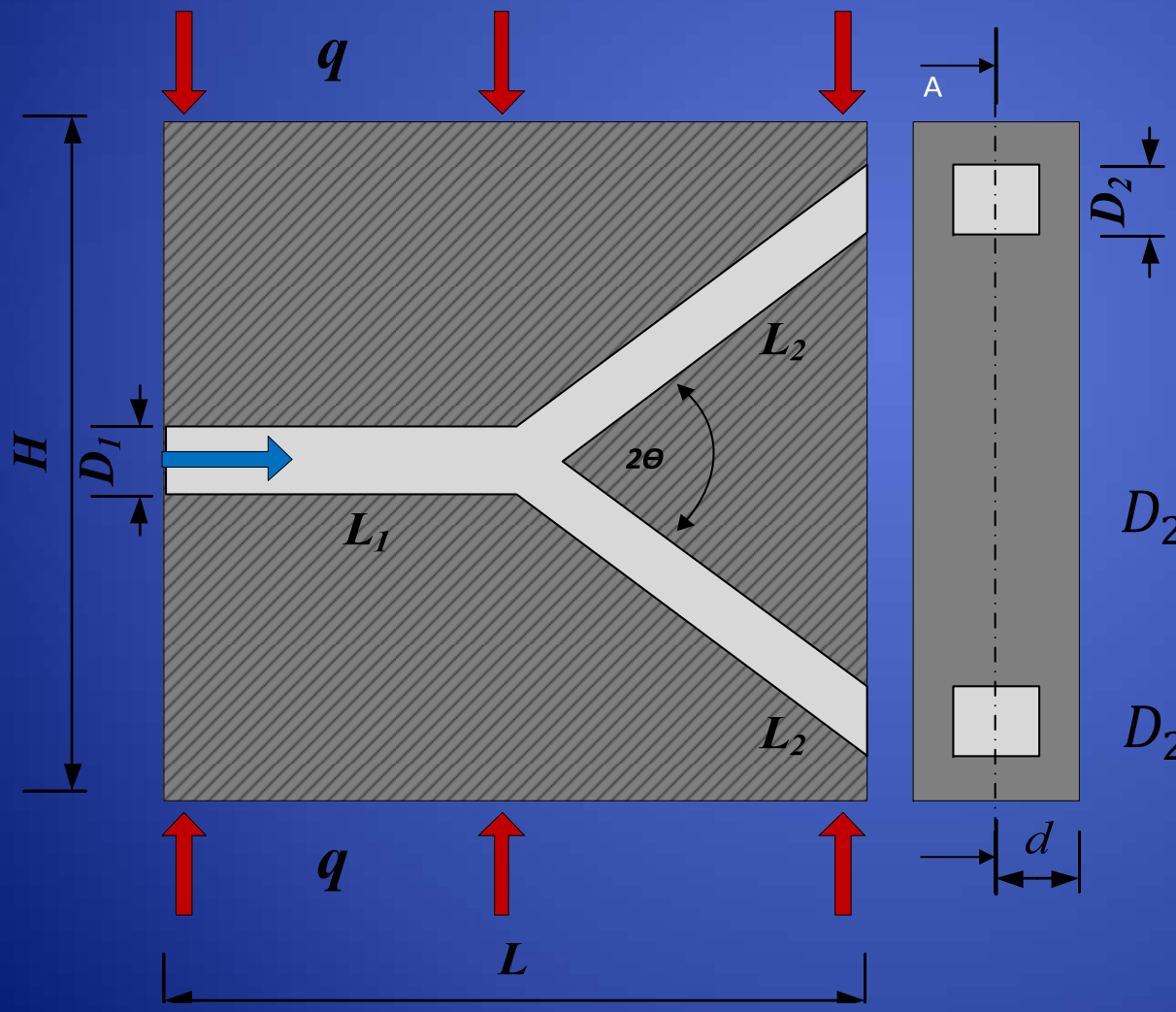

Porosity

$$\varphi = \frac{V_s}{V_t}$$

Channel Height

$$D_2 = \frac{(1-\varphi)H}{\left(2^{1/3}\alpha + \frac{2(1-\alpha)}{cos\theta}\right)}$$

$$D_2 = 2^{-1/3}D_1$$

Bifurcation Angle - 2θ

Mesh Refinement

- Structured Mesh
  - Robust
  - Cell Skewness
- Symmetry Plane
- Fluid Region Refinement
  - Capture Boundary Layer
    - Prism Layers
- High Cell Growth
- Acute Angle – Prism Layer Reduction

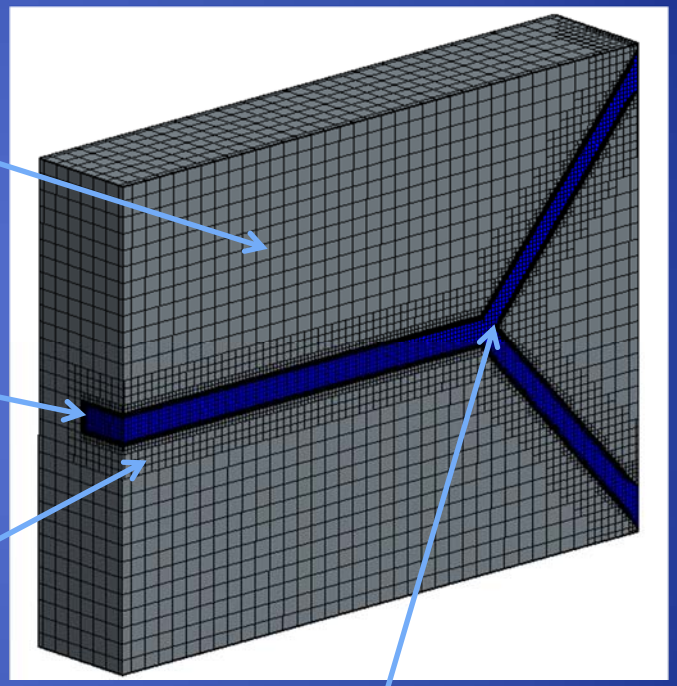

Results

2D Simple

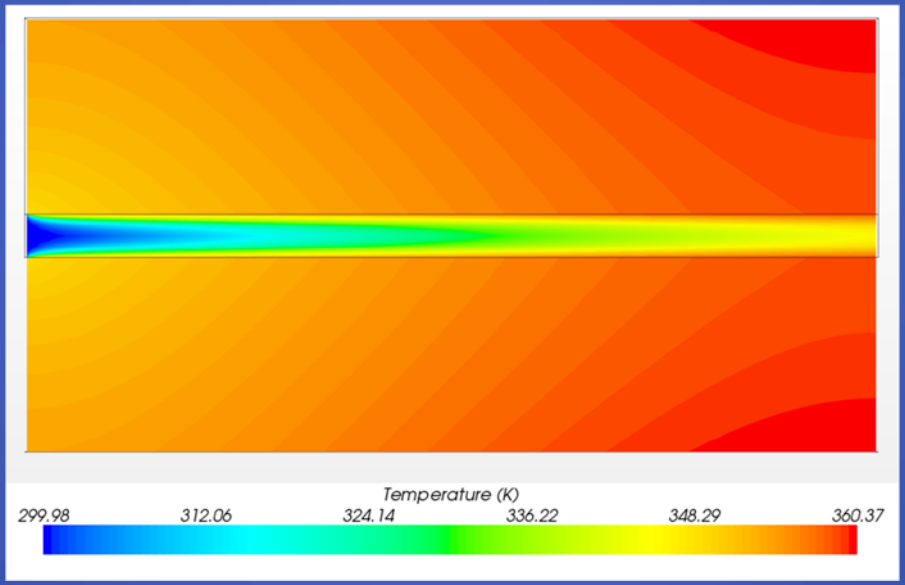

Results

3D Complex

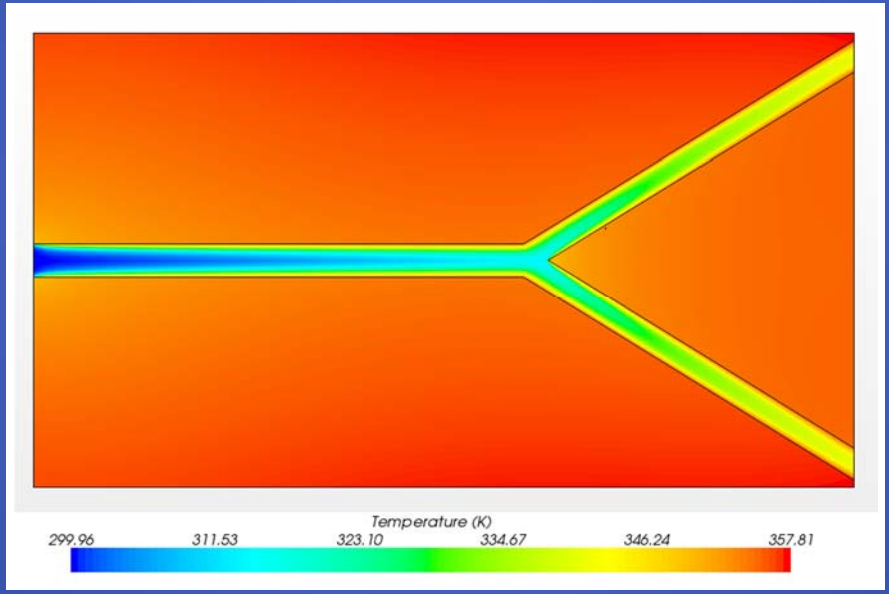

Results

Excess Temperature vs. Geometric Ratio

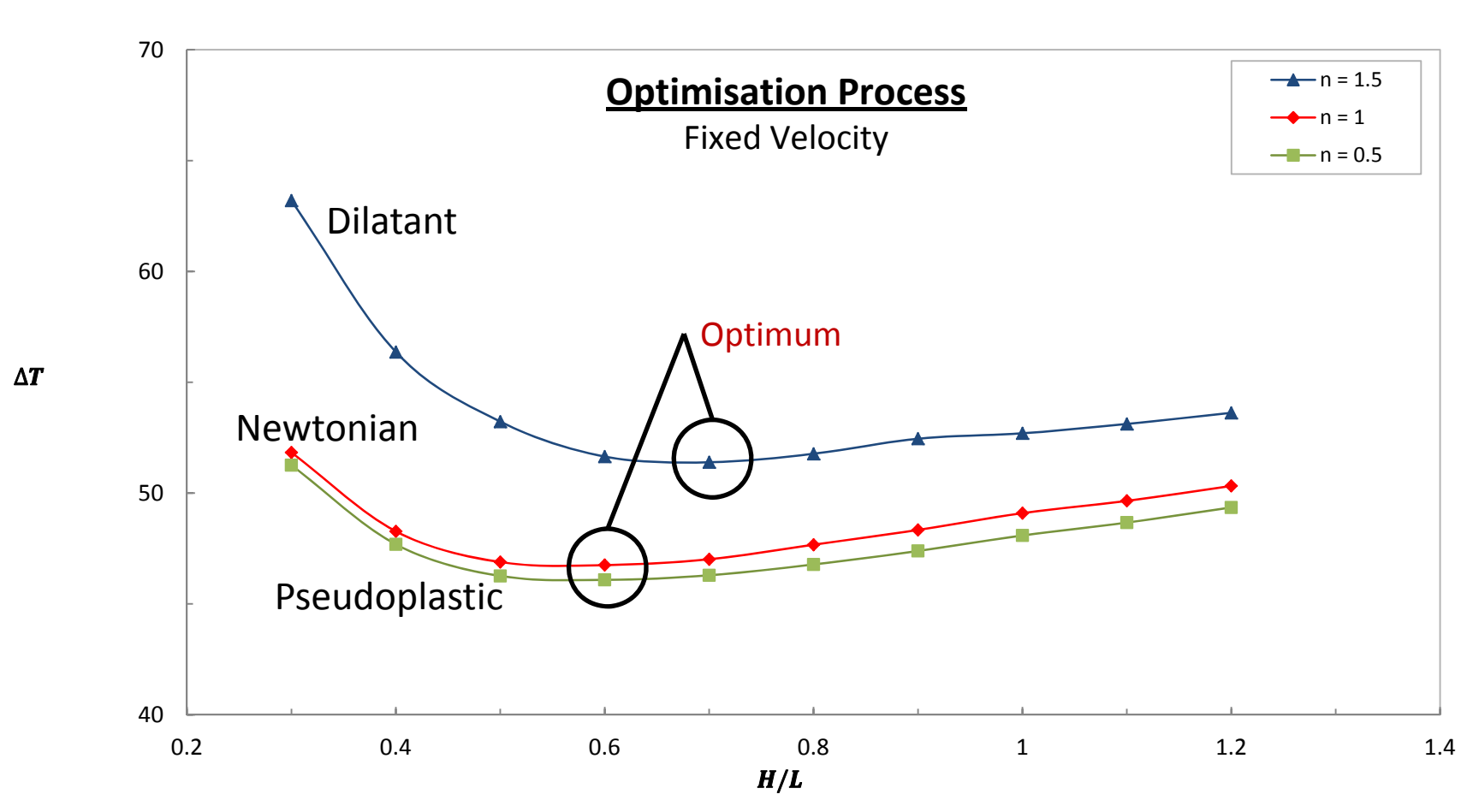

Results

Thermal Conductance vs. Velocity

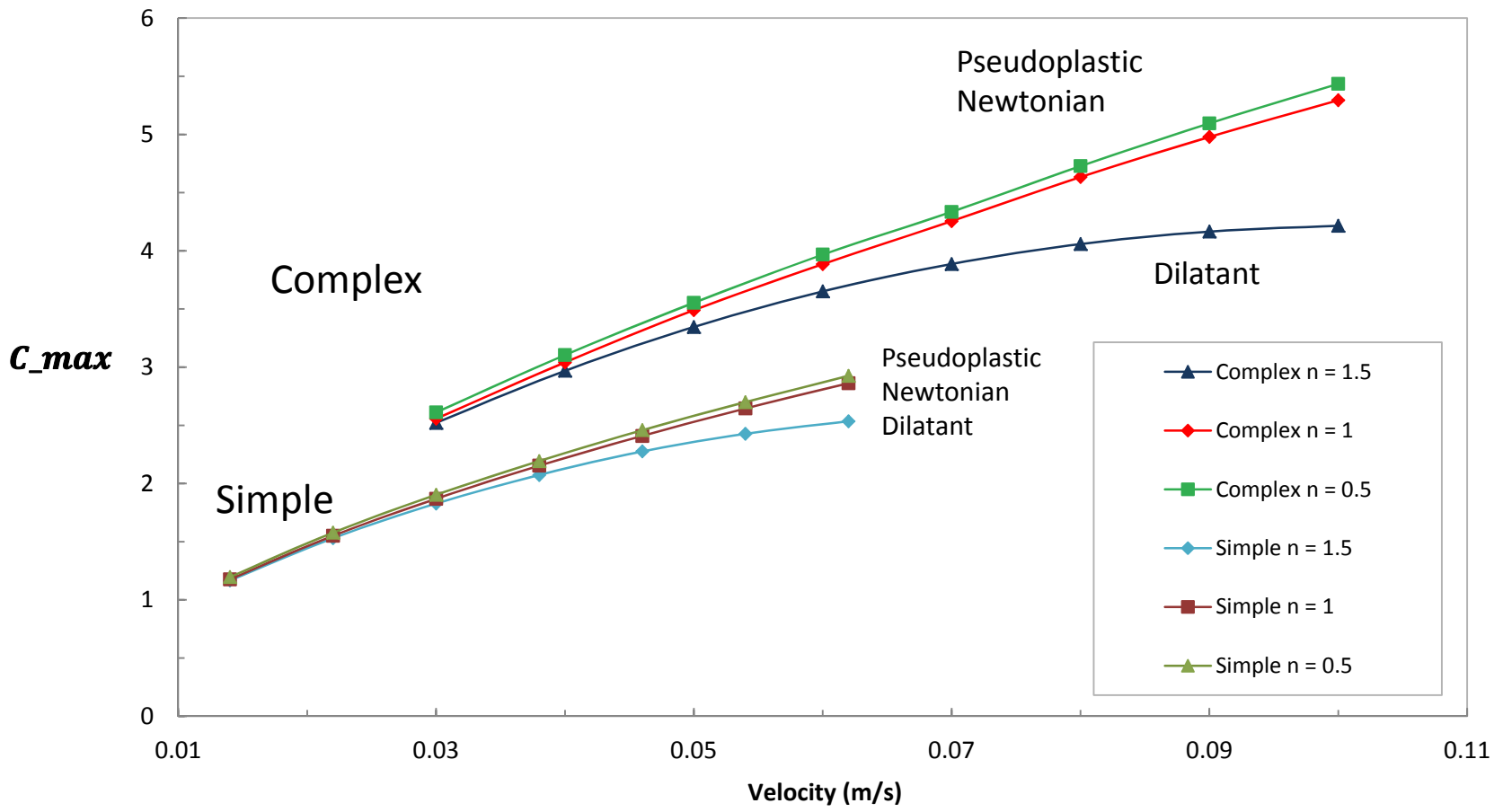

Results

Normalised Pressure Drop vs. Velocity

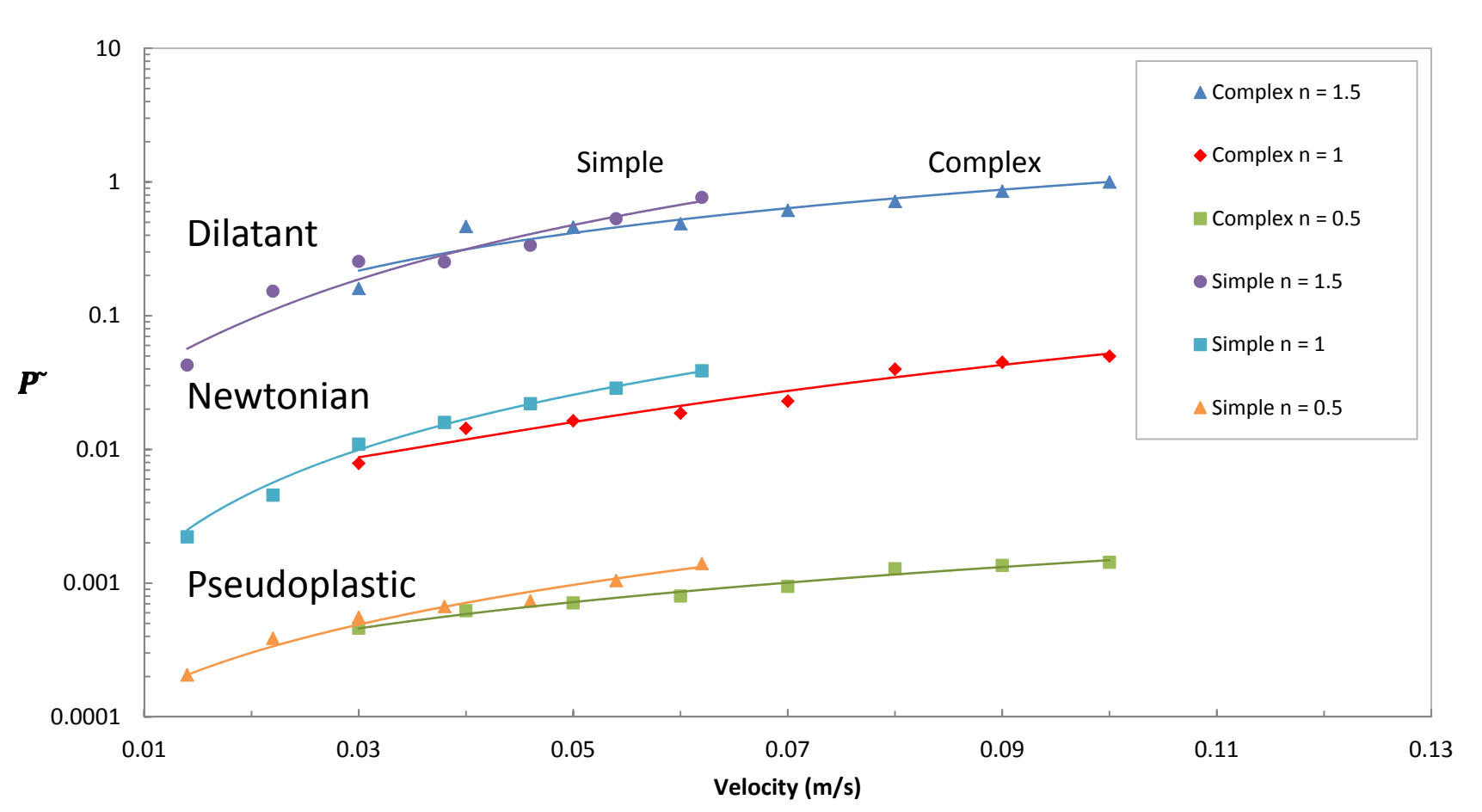

Conclusion

Complex Micro-channel

$\xrightarrow{\text{yields}}$ Higher thermal conductance

Pseudoplastic Working Fluid ($n < 1$)

$\xrightarrow{\text{yields}}$ Higher thermal conductance

$\xrightarrow{\text{yields}}$ Lower pressure drop

Complex & Pseudoplastic

$\xrightarrow{\text{yields}}$ Higher efficiency

Thank you!

Questions?

Geometric Optimisation of Heat Transfer in Channels using Newtonian and Non-Newtonian Fluids

Marc Stocks

Prof T Bello-Ochende

Prof JP Meyer

Department of Mechanical and Aeronautical Engineering

University of Pretoria

Mesh Refinement

Mesh Independence

Cells	Base size (m)	Thermal Resistance	% change
21400	2.2×10^{-4}	50.7984	-
25586	2.0×10^{-4}	50.6758	0.241
30912	1.8×10^{-4}	49.7835	1.761
66304	**1.6×10^{-4}**	**49.4732**	**0.623**
117400	1.4×10^{-4}	49.3278	0.294

Cells	Base size (m)	ΔT_{min}	% change
26043	1.4×10^{-3}	12.677368	-
32210	1.2×10^{-3}	12.560608	0.921
46424	1.0×10^{-3}	12.710358	-1.192
77903	0.8×10^{-3}	12.684174	0.206
146245	**0.6×10^{-3}**	**12.626709**	**0.453**
338342	0.4×10^{-3}	12.636658	-0.079